CONTRACT PLANS

FOR THE CONSTRUCTION OF:

CRP No. 3683-02
North Star Park City Upper Bridge B-4 Replacement

Federal Aid Project No. BROS-2024(033)
Contract No. TA-6987

June 2021

OKANOGAN COUNTY
DEPARTMENT OF PUBLIC WORKS
1234-A Second Avenue South, Okanogan WA 98840

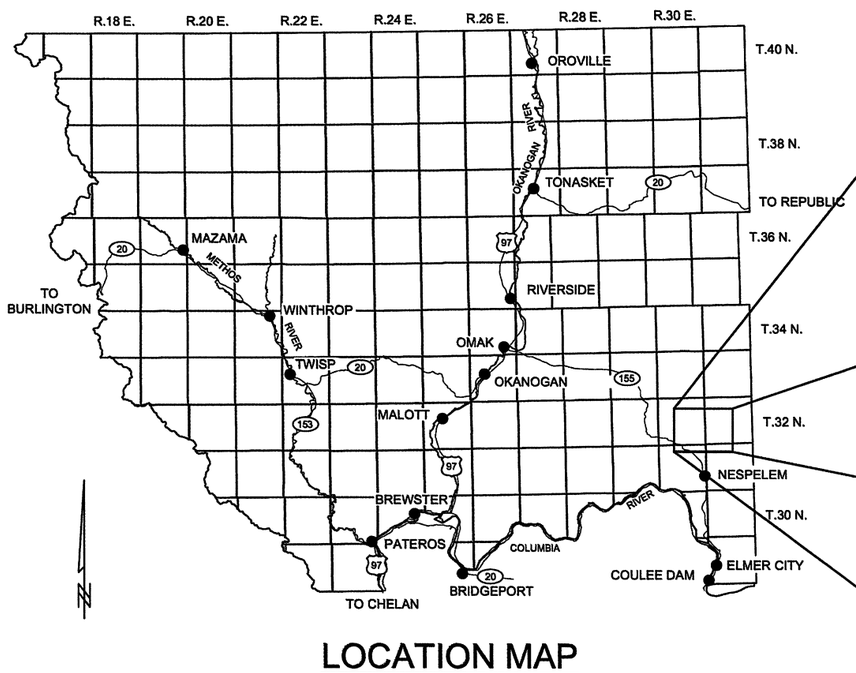

LOCATION MAP

NOT TO SCALE

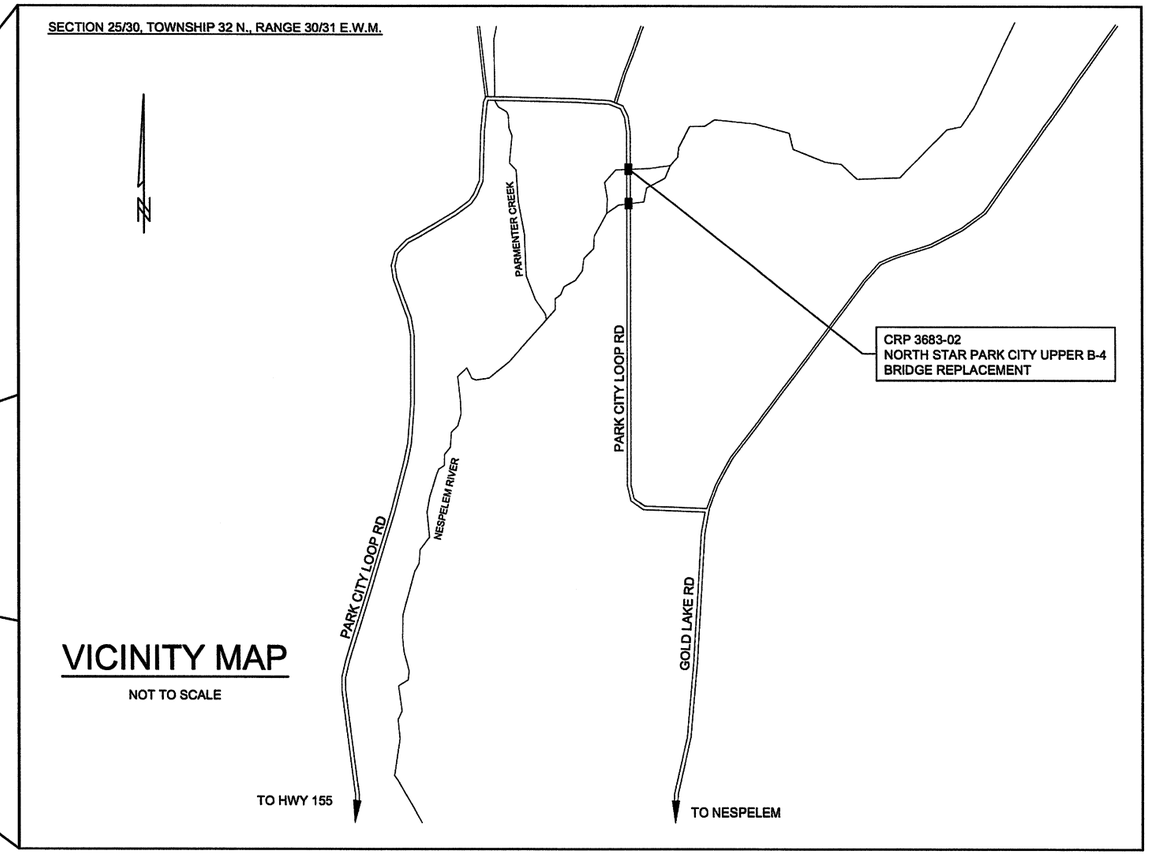

VICINITY MAP

NOT TO SCALE

SHEET INDEX

COVER SHEET 1
VICINITY, LOCATION MAP & SHEET INDEX 2
SUMMARY OF QUANTITIES 3
TOPOGRAPHIC SURVEY 1 4
TOPOGRAPHIC SURVEY 2 5
ROADWAY PLAN 6
BRIDGE LAYOUT 7
SECTIONS & GENERAL NOTES 8
ABUTMENT PLAN & ELEVATION 9
ABUTMENT & WINGWALL DETAILS 10
GIRDER DETAILS 1 11
GIRDER DETAILS 2 12
RAILING DETAILS 1 13
RAILING DETAILS 2 14
GUARDRAIL & SHOULDER LAYOUT 15
CHANNEL PROTECTION 16
TRAFFIC CONTROL PLAN 17

SUSAN M. KOVICH
STATE OF WASHINGTON
39869
REGISTERED
PROFESSIONAL ENGINEER
6/21/21

Designed by: SMK Date: 2/21 Drawn by: AVK Date: 2/21 Checked by: SMK Date: 4/21 Fed. Funct. Class: Local Terrain Type: Flat Design Year: 2040 Design Year ADT: 60 Design Speed: 50	Nicholls Kovich Engineering, PLLC P.O. Box 1050 Veradale WA 99037-1050 Phone: (509) 921-6747 Fax: (509) 242-8777 E-mail: info@nichollskovich.com	Fed. Aid Proj. No. BROS-2024(033) Project No. 3683-02 Approved: _____ Approval Date	Okanogan County Department of Public Works 1234-A 2nd Ave. S. 509-422-7300 Okanogan, Washington 98840	COUNTY ROAD PROJECT NO. 3683-02 VICINITY, LOCATION MAP & SHEET INDEX B-4 BRIDGE REPLACEMENT	SHEET 2 of 17

SUMMARY OF ESTIMATED QUANTITIES

ITEM NO.	STANDARD ITEM NO.	ESTIMATED QUANTITY	UNIT	ITEM DESCRIPTION
				PREPARATION
1	0001	1	L.S.	MOBILIZATION
2	0035	1	L.S.	CLEARING AND GRUBBING
3	0038	1	EST.	ARCHAEOLOGICAL AND HISTORICAL SALVAGE
4	0071	1	L.S.	REMOVING EXISTING BRIDGE NO. B-4
				GRADING
5	0310	260	C.Y.	ROADWAY EXCAVATION INCL. HAUL
6	0405	242	C.Y.	COMMON BORROW INCL. HAUL
7	0470	643	C.Y.	EMBANKMENT COMPACTION
				DRAINAGE
8	1040	250	C.Y.	CHANNEL EXCAVATION INCL. HAUL
9	1074	205	C.Y.	LIGHT LOOSE RIPRAP
				STRUCTURE
10	4006	58	C.Y.	STRUCTURAL EXCAVATION CLASS A INCL. HAUL
11	4025	30	C.Y.	GRAVEL BACKFILL FOR WALL
12	4060	2	EACH	FURNISHING AND DRIVING CONCRETE TEST PILE
13	4070	720	L.F.	FURNISHING CONC. PILING
14	4080	12	EACH	DRIVING CONC. PILE
15	4149	4463	LB.	ST. REINF. BAR FOR BRIDGE
16	4300	1	L.S.	SUPERSTRUCTURE – NORTH STAR PARK CITY UPPER BRIDGE B-4
17	4322	43	C.Y.	CONC. CLASS 4000 FOR BRIDGE
				SURFACING
18	5100	1106	TON	CRUSHED SURFACING BASE COURSE
				HOT MIX ASPHALT
19	5767	208	TON	HMA CL. 1/2 IN. PG 64-28
				EROSION CONTROL AND PLANTING
20	6403	10	DAY	ESC LEAD
21	6414	0.2	ACRE	SEEDING, FERTILIZING, AND MULCHING
22	6490	1,000.00	EST.	EROSION/WATER POLLUTION CONTROL
				TRAFFIC
23	6719	4	EACH	BEAM GUARDRAIL TYPE 31 NON-FLARED TERMINAL
24	6727	100	L.F.	EXTRUDED CURB
25	6760	4	EACH	BEAM GUARDRAIL TRANSITION SECTION TYPE 21
26	6806	470	L.F.	PAINT LINE
27	6971	1	L.S.	PROJECT TEMPORARY TRAFFIC CONTROL
				OTHER ITEMS
28	7018	100	mGal	WATER
29	7037	1	L.S.	STRUCTURE SURVEYING
30	7114	310	L.F.	REMOVING AND RESETTING WIRE FENCE
31		1	EACH	REMOVE AND RESET SIGN
32	7490	1	L.S.	TRIMMING AND CLEANUP
33	7552	342	S.Y.	CONSTRUCTION GEOTEXTILE FOR SOIL STABILIZATION
34	7728	-1.00	CALC	MINOR CHANGE
35	7736	1	L.S.	SPCC PLAN
36		1	L.S.	RECORD DRAWINGS

SUSAN M. KOVICH
STATE OF WASHINGTON
39869
REGISTERED PROFESSIONAL ENGINEER
6/21/21

Designed by: SMK Date: 4/21
Drawn by: SEC Date: 4/21
Checked by: SMK Date: 4/21
Fed. Funct. Class: Local
Terrain Type: Flat
Design Year: 2040
Design Year ADT: 60
Design Speed: 50

Nicholls Kovich Engineering, PLLC
P.O. Box 1050 Veradale WA 99037-1050
Phone: (509) 921-6747 Fax: (509) 242-8777
E-mail: info@nichollskovich.com

Fed. Aid Proj. No. BROS-2024(033)
Project No. 3683-02

Approved: _____ Approval Date

Okanogan County
Department of Public Works
1234-A 2nd Ave. S. 509-422-7300
Okanogan, Washington 98840

COUNTY ROAD PROJECT NO. 3683-02

SUMMARY OF QUANTITIES

B-4 BRIDGE REPLACEMENT

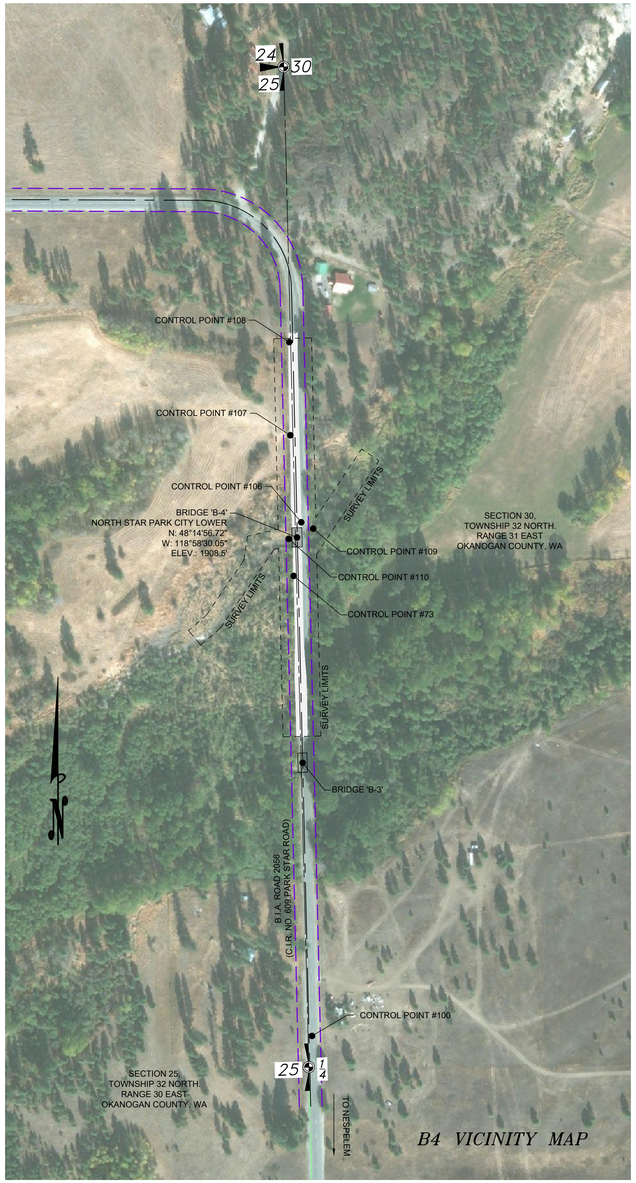

B4 VICINITY MAP

PURPOSE

THE PURPOSE OF THIS SURVEY IS TO DEFINE THE EXISTING TOPOGRAPHICAL FEATURES WITHIN THE RIGHT OF WAY OF O.C.R. 3683 (PARK CITY LOOP ROAD), AND AS-BUILT BRIDGE B-4 BY PERFORMING STREAM AND ROADWAY CROSS SECTIONS WITHIN THE SURVEY AREA LOCATED IN OKANOGAN COUNTY, WASHINGTON, COLVILLE INDIAN RESERVATION TO AID IN THE DESIGN OF A BRIDGE REPLACEMENT PROJECT.

TOPOGRAPHY NOTES

1. FIELDWORK WAS PERFORMED ON 12/3/2020 - 12/4/2020 & 12/29/2020.
2. CONTOUR INTERVAL = 2 FOOT
3. VISUAL UTILITIES WERE LOCATED DURING THIS SURVEY. THE UNDERGROUND UTILITIES SHOWN ARE BASED ON FIELD OBSERVATIONS AND THE MARKED UTILITIES PER WASHINGTON ONE CALL, TICKET NO. 16037835, DATED 2/15/16. UNDERGROUND TELECOM EXISTS ALONG THE WEST SHOULDER OF THE ROAD NORTH OF BRIDGE B4, HOWEVER CENTURY LINK WILL NOT LOCATE. ADDITIONAL SUBSURFACE UTILITIES MAY EXIST AND THE UTILITIES SHOWN ON THIS SURVEY NEED TO BE FIELD VERIFIED PRIOR TO EXCAVATION.
4. ORDINARY HIGH WATER LATH SET BY OKANOGAN COUNTY, AS SHOWN ON THIS MAP, RANGE IN ELEVATION FROM 1900.5' - 1902.8'. THE ELEVATION OF 1902.5' WAS CHOSEN TO REPRESENT ORDINARY HIGH WATER FOR THIS SURVEY AS IT IS NEAR THE UPPER END OF THAT RANGE.
5. DURING THE FIELD WORK PORTION OF THIS SURVEY THERE WAS UP TO 1 FOOT OF SNOW ON THE GROUND IN SOME PLACES WHICH MAY HAVE COVERED SOME GROUND FEATURES IN THE SURVEY AREA.

SURVEY NOTES

1. THE RIGHT OF WAY SHOWN IS BASED ON THE RIGHT OF WAY MAP "PROJECT C.I.R. 609 PARK STAR ROAD", U.S. DEPARTMENT OF INTERIOR, BUREAU OF INDIAN AFFAIRS, COLVILLE AGENCY, NESPELEM, WASHINGTON DATED JUNE 26, 1957.
2. THE RIGHT OF WAY LOCATION WAS DETERMINED BY THE CALCULATED SECTION LINE AND THE FIELD LOCATED CENTERLINE OF PARK CITY LOOP ROAD.

LEGEND

- UTILITY POLE
- GUY ANCHOR
- TELECO PEDESTAL
- SIGN
- GUARD RAIL
- GATE
- WIRE FENCE
- UNDERGROUND TELECO LINE
- OVERHEAD POWER LINE
- TREE/BRUSH LIMITS
- MAJOR CONTOUR
- MINOR CONTOUR
- 1902.5' CONTOUR (O.H.W.)
- THREAD OF MAIN STREAM CHANNEL
- SET MAG NAIL
- SET HUB & TACK
- FOUND O.H.W. LATH
- CONCRETE SURFACE
- ASPHALT ROADWAY SURFACE
- DECIDUOUS TREE/ 4" OR GREATER
- CONIFEROUS TREE/ 4" OR GREATER
- 1918.66' SPOT ELEVATION
- AGL ABOVE GROUND LEVEL
- T.P.N. TAX PARCEL NUMBER
- R/W RIGHT OF WAY LINE
- O.H.W. ORDINARY HIGH WATER

CONTROL POINT TABLE

POINT #	DESCRIPTION	NORTHING	EASTING	ELEVATION
73	MAG NAIL	460997.86	2093122.77	1908.5'
100	HUB & TACK	459783.73	2093171.28	1907.6'
106	MAG NAIL	461139.41	2093142.71	1908.5
107	MAG NAIL	461369.13	2093113.94	1907.9'
108	MAG NAIL	461614.78	2093111.23	1908.0'
109	HUB & TACK	461122.52	2093174.50	1903.6'
110	HUB & TACK	461095.64	2093109.94	1900.6'

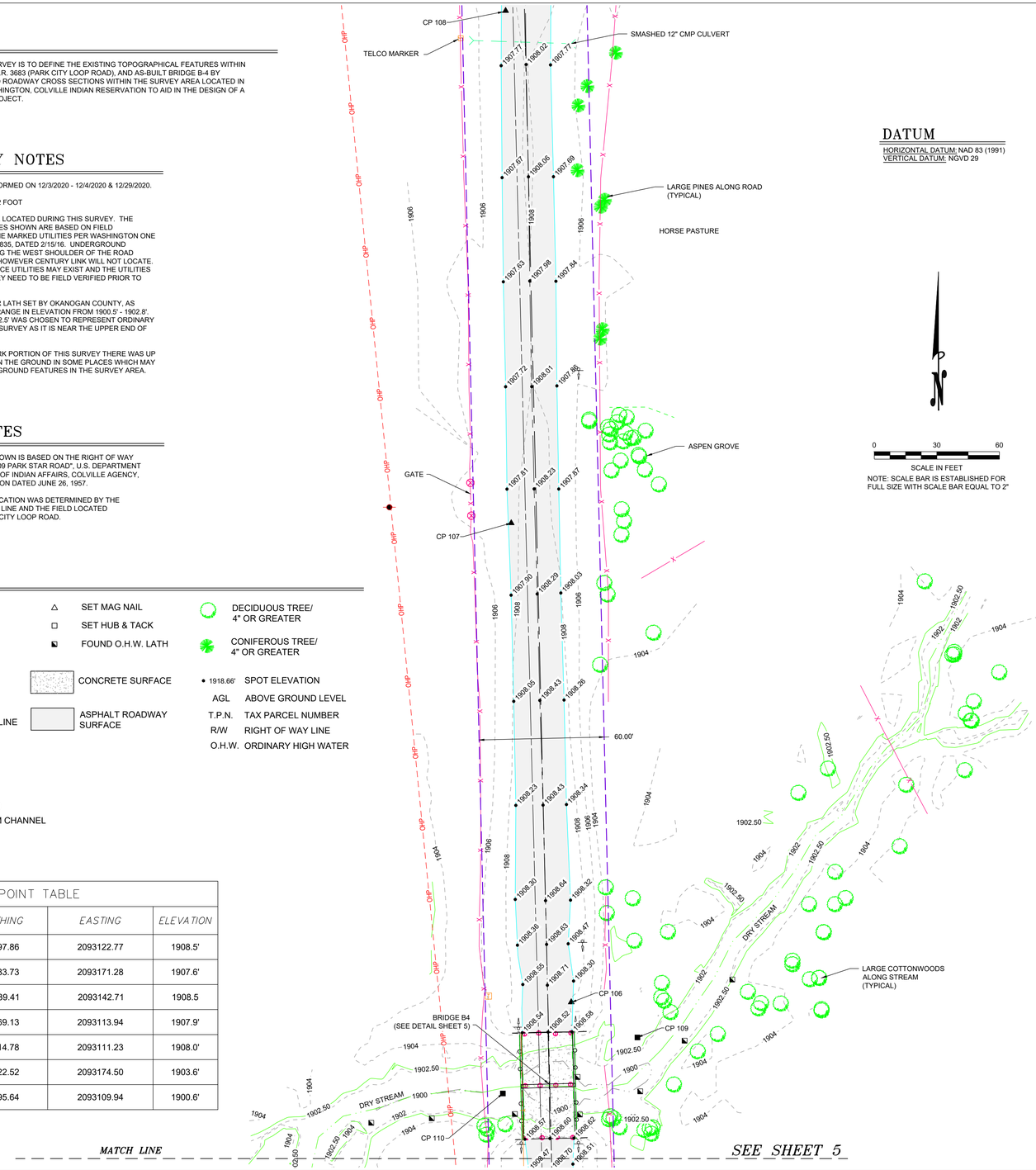

DATUM

HORIZONTAL DATUM: NAD 83 (1991)
VERTICAL DATUM: NGVD 29

N

0 30 60
SCALE IN FEET
NOTE: SCALE BAR IS ESTABLISHED FOR FULL SIZE WITH SCALE BAR EQUAL TO 2"

DREW E. BECKER
STATE OF WASHINGTON
53117
REGISTERED PROFESSIONAL LAND SURVEYOR

Erlandsen
SURVEYING | PLANNING | ENGINEERING

http://www.erlandsen.com
ERLANDSEN
P.O. BOX 739
210 N. BRIDGE ST.
BREWSTER, WA 98812
PH: 509.689.2529
TOLL FREE (800) 732-7442

DRAWN BY: DB
DATE: 12/30/2020
SCALE: NA
LAYOUT: TP 1
FILE NO: 20200412.0000TP1.DWG
JOB NO: 20200412

Designed by:		Date:	
Drawn by:	DB	Date:	12/30/20
Checked by:	KGE	Date:	12/30/20
Fed. Funct. Class:	Local		
Terrain Type:	Flat		
Design Year:			
Design Year ADT.:	60		
Design Speed:	50		

Nicholls Kovich Engineering, PLLC
P.O. Box 1050 Veradale WA 99037-1050
Phone: (509) 921-6747 Fax: (509) 242-8777
E-mail: info@nichollskovich.com

Fed. Aid Proj. No. BROS-2024(033)
Project No. 3683-02

Approved: _____ Approval Date

OKANOGAN COUNTY DEPT. of PUBLIC WORKS

Okanogan County
Department of Public Works
1234-A 2nd Ave. S. 509-422-7300
Okanogan, Washington 98840

COUNTY ROAD PROJECT NO. 3683-02

TOPOGRAPHIC SURVEY 1

B-4 BRIDGE REPLACEMENT

LEGEND

- UTILITY POLE
- GUY ANCHOR
- TELECO PEDESTAL
- SIGN
- GUARD RAIL
- GATE
- WIRE FENCE
- UNDERGROUND TELECO LINE
- OVERHEAD POWER LINE
- TREE/BRUSH LIMITS
- MAJOR CONTOUR
- MINOR CONTOUR
- 1902.5' CONTOUR (O.H.W.)
- THREAD OF MAIN STREAM CHANNEL
- SET MAG NAIL
- SET HUB & TACK
- FOUND O.H.W. LATH
- CONCRETE SURFACE
- ASPHALT ROADWAY SURFACE
- DECIDUOUS TREE/ 4" OR GREATER
- CONIFEROUS TREE/ 4" OR GREATER
- 1918.66' SPOT ELEVATION
- AGL ABOVE GROUND LEVEL
- T.P.N. TAX PARCEL NUMBER
- R/W RIGHT OF WAY LINE
- O.H.W. ORDINARY HIGH WATER

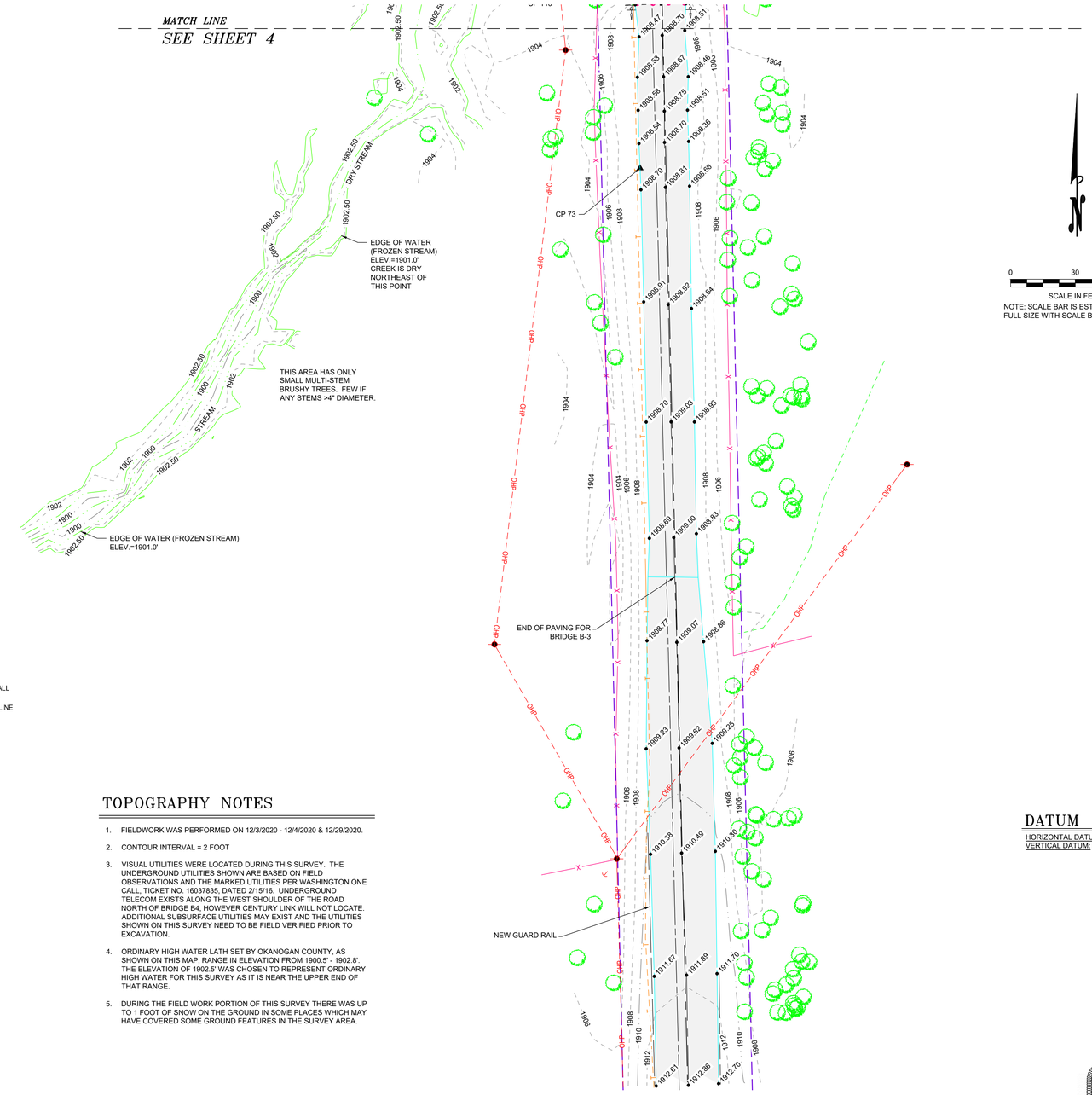

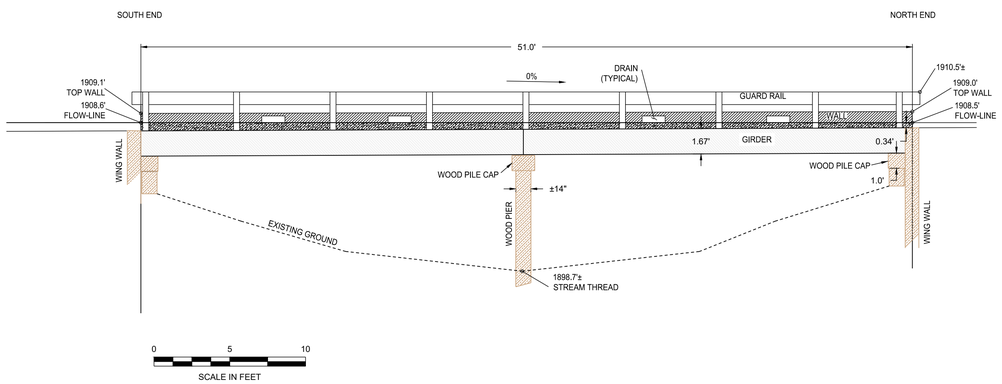

B4 EXISTING BRIDGE SECTION

TOPOGRAPHY NOTES

1. FIELDWORK WAS PERFORMED ON 12/3/2020 - 12/4/2020 & 12/29/2020.
2. CONTOUR INTERVAL = 2 FOOT
3. VISUAL UTILITIES WERE LOCATED DURING THIS SURVEY. THE UNDERGROUND UTILITIES SHOWN ARE BASED ON FIELD OBSERVATIONS AND THE MARKED UTILITIES PER WASHINGTON ONE CALL, TICKET NO. 16037835, DATED 2/15/16. UNDERGROUND TELECOM EXISTS ALONG THE WEST SHOULDER OF THE ROAD NORTH OF BRIDGE B4, HOWEVER CENTURY LINK WILL NOT LOCATE. ADDITIONAL SUBSURFACE UTILITIES MAY EXIST AND THE UTILITIES SHOWN ON THIS SURVEY NEED TO BE FIELD VERIFIED PRIOR TO EXCAVATION.
4. ORDINARY HIGH WATER LATH SET BY OKANOGAN COUNTY, AS SHOWN ON THIS MAP, RANGE IN ELEVATION FROM 1900.5' - 1902.8'. THE ELEVATION OF 1902.5' WAS CHOSEN TO REPRESENT ORDINARY HIGH WATER FOR THIS SURVEY AS IT IS NEAR THE UPPER END OF THAT RANGE.
5. DURING THE FIELD WORK PORTION OF THIS SURVEY THERE WAS UP TO 1 FOOT OF SNOW ON THE GROUND IN SOME PLACES WHICH MAY HAVE COVERED SOME GROUND FEATURES IN THE SURVEY AREA.

DATUM

HORIZONTAL DATUM: NAD 83 (1991)
VERTICAL DATUM: NGVD 29

Erlandsen
SURVEYING | PLANNING | ENGINEERING
http://www.erlandsen.com
ERLANDSEN
P.O. BOX 739
210 N. BRIDGE ST.
BREWSTER, WA 98812
PH: 509.689.2529
TOLL FREE (800) 732-7442

DRAWN BY: DB LAYOUT: TP 2
DATE: 12/30/2020 FILE NO: 20200412.0000TP1.DWG
SCALE: NA JOB NO: 20200412

Designed by:		Date:	
Drawn by:	DB	Date:	12/30/20
Checked by:	KGE	Date:	12/30/20
Fed. Funct. Class:	Local		
Terrain Type:	Flat		
Design Year:			
Design Year ADT.:	60		
Design Speed:	50		

Nicholls Kovich Engineering, PLLC
P.O. Box 1050 Veradale WA 99037-1050
Phone: (509) 921-6747 Fax: (509) 242-8777
E-mail: info@nichollskovich.com

Fed. Aid Proj. No. BROS-2024(033)
Project No. 3683-02

Approved: _____ _____ Approval Date

Okanogan County Department of Public Works
1234-A 2nd Ave. S. 509-422-7300
Okanogan, Washington 98840

COUNTY ROAD PROJECT NO. 3683-02

TOPOGRAPHIC SURVEY 2

B-4 BRIDGE REPLACEMENT

SECTION 25/30, TOWNSHIP 32 N., RANGE 30/31 E.W.M.
OKANOGAN COUNTY

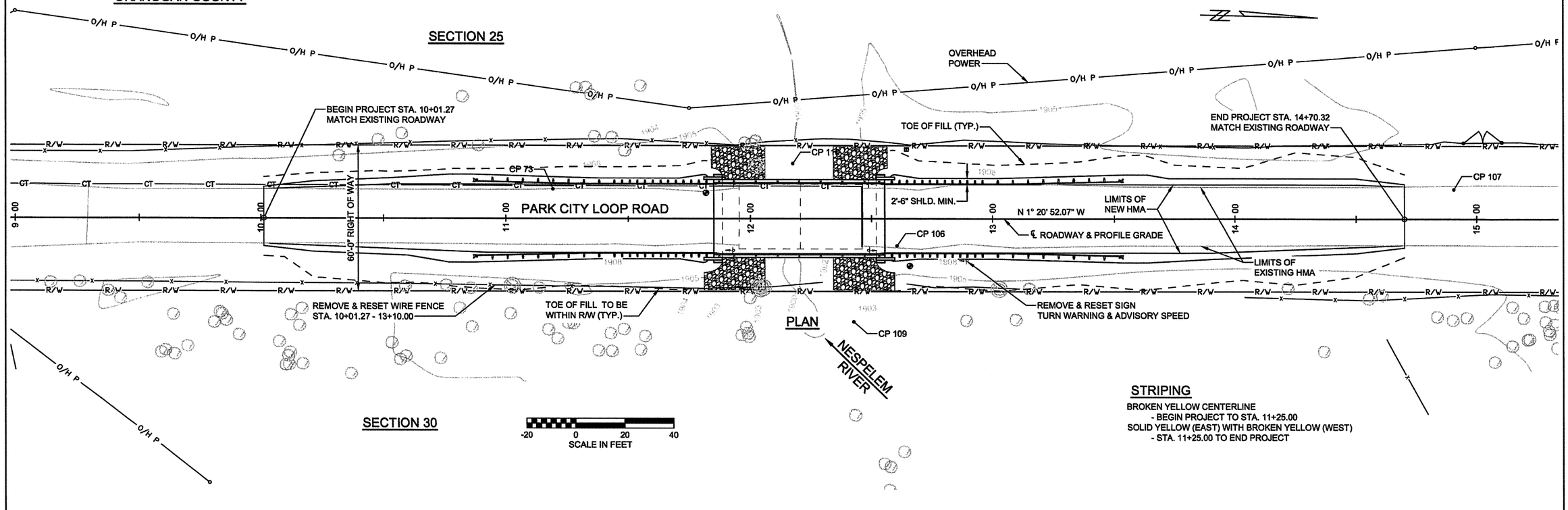

PLAN

STRIPING

BROKEN YELLOW CENTERLINE
- BEGIN PROJECT TO STA. 11+25.00

SOLID YELLOW (EAST) WITH BROKEN YELLOW (WEST)
- STA. 11+25.00 TO END PROJECT

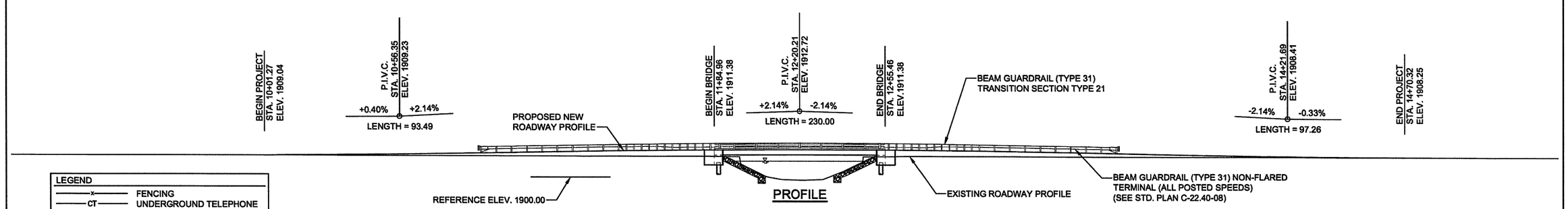

PROFILE

LEGEND

—x—	FENCING
—CT—	UNDERGROUND TELEPHONE
—O/H P—	OVERHEAD POWER
—R/W—	RIGHT OF WAY
— — — —	TOE OF SLOPE
•	CONTROL POINT
	SIGN
	GEOTECHNICAL BORING
	CONIFEROUS TREE
	DECIDUOUS TREE
	REMOVE TREE AS DIRECTED BY ENGINEER

CP	DESCRIPTION	NORTHING	EASTING	ELEVATION	STATION	OFFSET
73	MAG NAIL	460997.819	2093122.750	1908.624	11+19.39	12.08 LT.
106	MAG NAIL	461139.409	2093142.708	1908.505	12+60.47	11.21 RT.
107	MAG NAIL	461369.125	2093113.944	1907.933	14+90.80	12.15 LT.
108	MAG NAIL	461614.783	2093111.233	1907.948	17+36.46	9.08 LT.
109	HUB & TACK	461122.523	2093174.500	1903.616	12+42.84	42.59 RT.
110	HUB & TACK	461095.637	2093109.938	1900.623	12+17.48	22.58 LT.

811 Know what's **below.** **Call** before you dig.

SUSAN M. KOVICH
STATE OF WASHINGTON
39869
REGISTERED PROFESSIONAL ENGINEER
6/21/21

Designed by: SMK	Date: 1/21
Drawn by: AVK	Date: 1/21
Checked by: SMK	Date: 4/21
Fed. Funct. Class: Local	
Terrain Type: Flat	
Design Year: 2040	
Design Year ADT: 60	
Design Speed: 50	

Nicholls Kovich Engineering, PLLC
P.O. Box 1050 Veradale WA 99037-1050
Phone: (509) 921-6747 Fax: (509) 242-8777
E-mail: info@nichollskovich.com

Fed. Aid Proj. No. BROS-2024(033)
Project No. 3683-02

Approved: _____ Approval Date

Okanogan County
Department of Public Works
1234-A 2nd Ave. S. 509-422-7300
Okanogan, Washington 98840

COUNTY ROAD PROJECT NO. 3683-02

ROADWAY PLAN

B-4 BRIDGE REPLACEMENT

SECTION 25/30, TOWNSHIP 32 N., RANGE 30/31 E.W.M.
OKANOGAN COUNTY

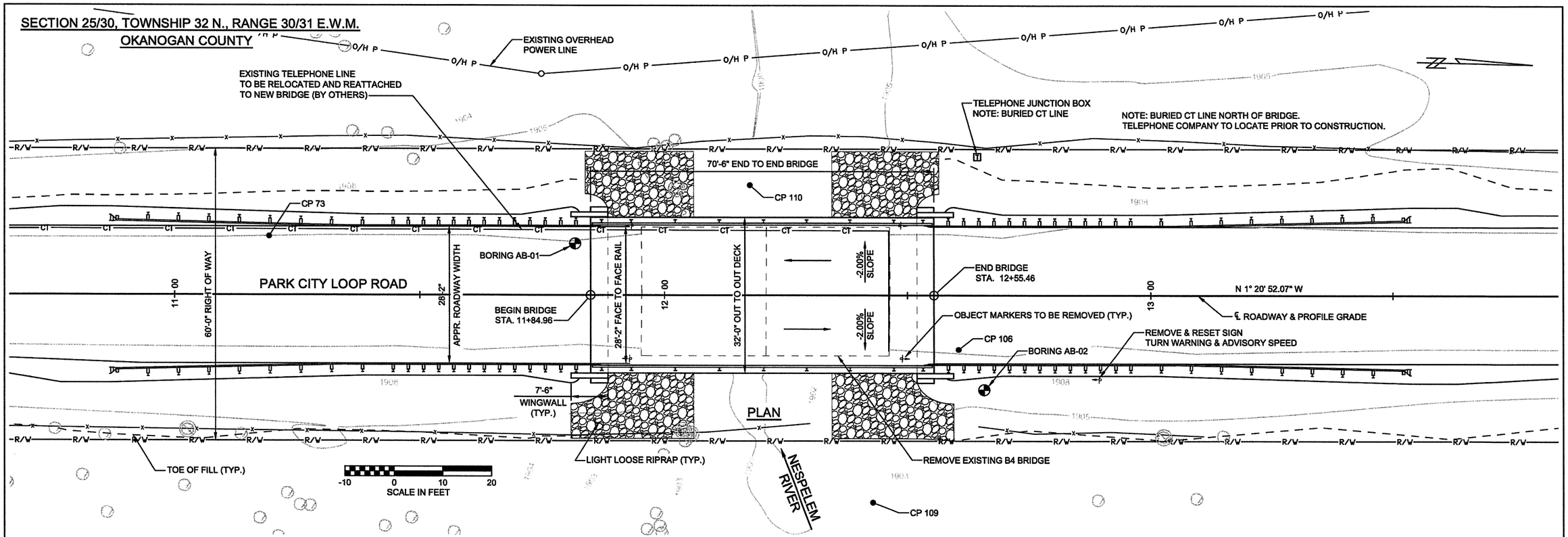

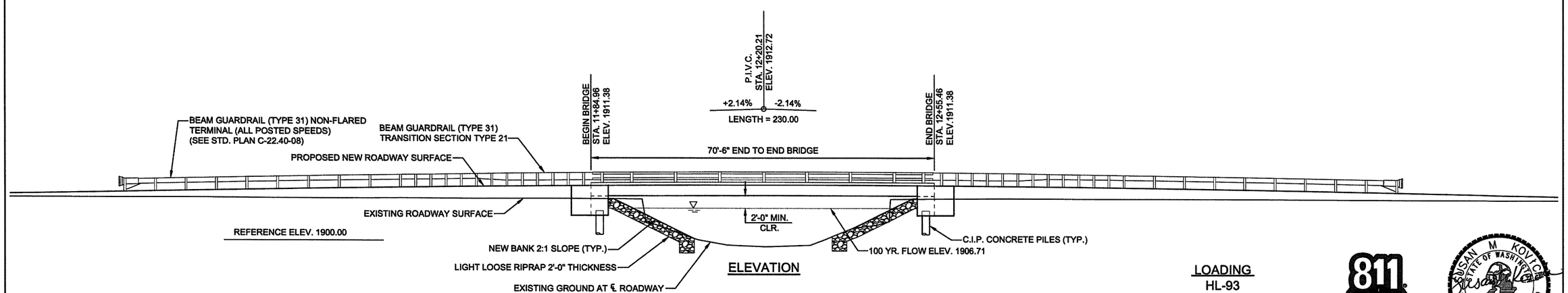

LOADING
HL-93

The Bridge is designed for a total of 3 in. of future overlay.

811 Know what's below. Call before you dig.

SUSAN M KOVICH
STATE OF WASHINGTON
39869
REGISTERED PROFESSIONAL ENGINEER
6/21/21

Designed by: SMK Date: 1/21	Nicholls Kovich Engineering, PLLC	Fed. Aid Proj. No. BROS-2024(033)	Okanogan County Department of Public Works
Drawn by: AVK Date: 1/21	P.O. Box 1050 Veradale WA 99037-1050	Project No. 3683-02	1234-A 2nd Ave. S. 509-422-7300
Checked by: SMK Date: 4/21	Phone: (509) 921-6747 Fax: (509) 242-8777	Approved: _____ Approval Date	Okanogan, Washington 98840
Fed. Funct. Class: Local	E-mail: info@nichollskovich.com		
Terrain Type: Flat			
Design Year: 2040			
Design Year ADT: 60			
Design Speed: 50			

COUNTY ROAD PROJECT NO. 3683-02

BRIDGE LAYOUT

B-4 BRIDGE REPLACEMENT

SHEET 7 of 17

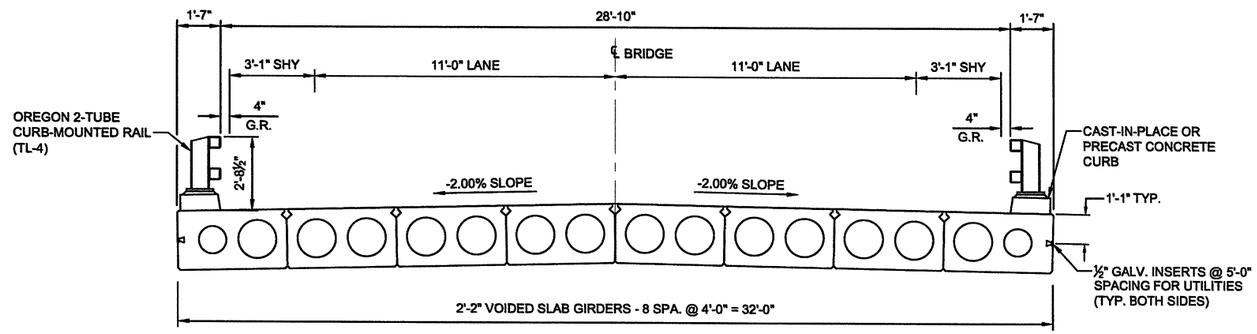

TYPICAL BRIDGE SECTION

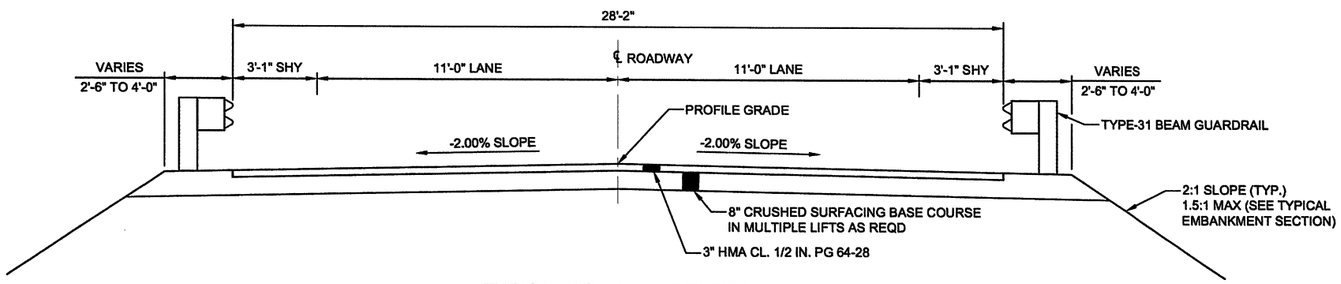

TYPICAL ROADWAY SECTION

WITH GUARDRAIL

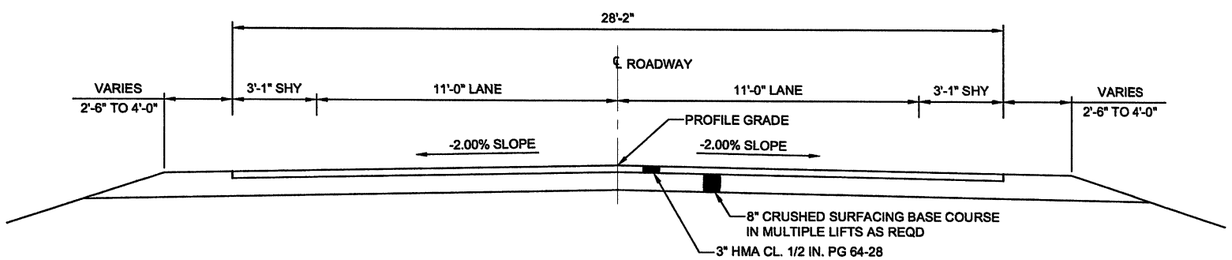

TYPICAL ROADWAY SECTION

WITHOUT GUARDRAIL

GENERAL NOTES

1. ALL MATERIALS AND WORK SHALL BE IN ACCORDANCE WITH THE REQUIREMENTS OF THE STATE OF WASHINGTON, DEPARTMENT OF TRANSPORTATION, STANDARD SPECIFICATIONS FOR ROAD, BRIDGE, AND MUNICIPAL CONSTRUCTION, DATED 2021.
2. THIS STRUCTURE HAS BEEN DESIGNED IN ACCORDANCE WITH THE REQUIREMENTS OF THE 9TH EDITION AASHTO "LRFD BRIDGE DESIGN SPECIFICATIONS," DATED 2020.
3. CAST-IN-PLACE CONCRETE (U.N.O.) SHALL BE CLASS 4000 MIX.
   CONCRETE FOR PILES SHALL BE CLASS 4000P MIX.
   STEEL CASING SHALL BE 50 KSI MEETING THE REQUIREMENTS OF 9-10.5 OF THE STANDARD SPECIFICATIONS.
4. FOR PRESTRESSED CONCRETE GIRDER REQUIREMENTS, SEE NOTES ON GIRDER SHEETS.
5. UNLESS OTHERWISE SHOWN ON THE PLANS, CONCRETE COVER SHALL BE MEASURED FROM THE FACE OF CONCRETE TO THE FACE OF ANY REINFORCING BAR. COVER SHALL BE 2½" AT THE TOP OF THE ROADWAY SLAB AND BOTTOM OF PILE CAP, 2" AT FACE OF CONCRETE EXPOSED TO EARTH, 1" AT THE BOTTOM OF THE ROADWAY SLAB, AND 1½" AT ALL OTHER LOCATIONS.
6. PILES FOR ABUTMENTS NO. 1 & NO. 2 SHALL BE 18" NOMINAL DIAMETER CAST-IN-PLACE CONCRETE PILES. THE PILES SHALL BE DRIVEN TO A NOMINAL DRIVING RESISTANCE OF 150 TONS. THE DRIVING EQUIPMENT SHALL MEET THE REQUIREMENTS OF SECTION 6.05 OF THE STANDARD SPECIFICATIONS. PILES SHALL BE DRIVEN TO A MINIMUM TIP ELEVATION OF 1861.00 FEET. PILES MAY NEED TO BE DRIVEN DEEPER TO DEVELOP THE REQUIRED GEOTECHNICAL RESISTANCE. ONE TEST PILE SHALL BE DRIVEN AT EACH ABUTMENT.

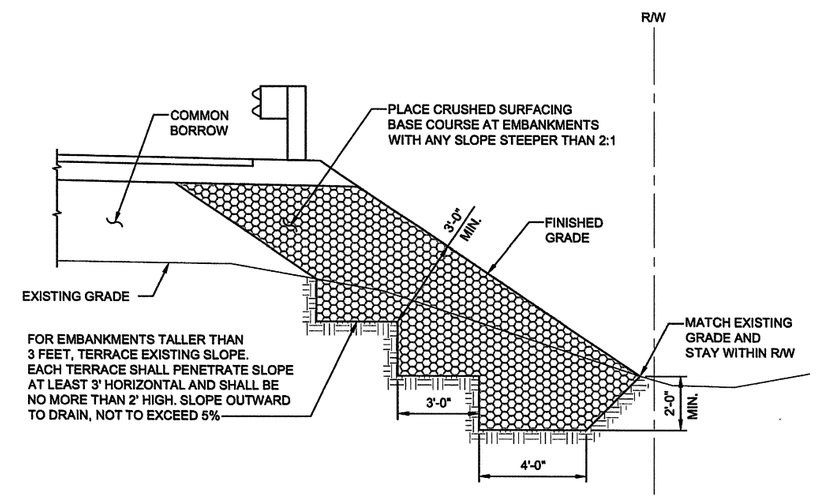

TYPICAL EMBANKMENT SECTION

STA. 11+72.00 RT. TO STA 13+52.00 RT.

FOR EMBANKMENT SLOPES OF HEIGHT GREATER THAN 3 FEET AND SLOPES STEEPER THAN 2:1. DO NOT EXCEED 1.5:1 SLOPE.

SUSAN M KOVICH
STATE OF WASHINGTON
39869
REGISTERED
PROFESSIONAL ENGINEER
6/21/21

Designed by: SMK	Date: 1/21		
Drawn by: AVK	Date: 1/21		
Checked by: SMK	Date: 4/21		
Fed. Funct. Class: Local			
Terrain Type: Flat			
Design Year: 2040			
Design Year ADT: 60			
Design Speed: 50			

Nicholls Kovich Engineering, PLLC
P.O. Box 1050 Veradale WA 99037-1050
Phone: (509) 921-6747 Fax: (509) 242-8777
E-mail: info@nichollskovich.com

Fed. Aid Proj. No. BROS-2024(033)
Project No. 3683-02

Approved: _____ Approval Date

Okanogan County
Department of Public Works
1234-A 2nd Ave. S. 509-422-7300
Okanogan, Washington 98840

COUNTY ROAD PROJECT NO. 3683-02

SECTIONS & GENERAL NOTES

B-4 BRIDGE REPLACEMENT

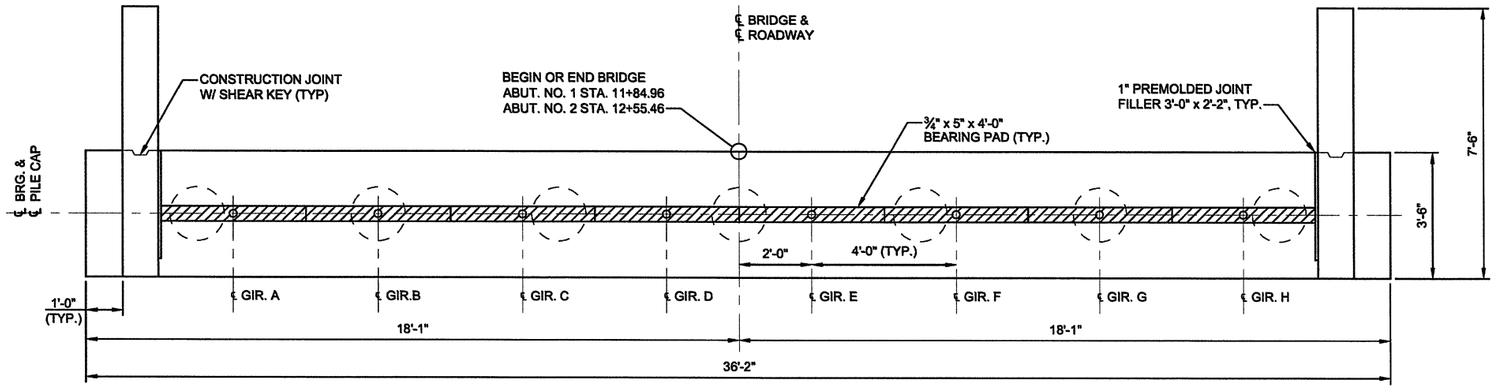

PILE CAP NO. 2 PLAN

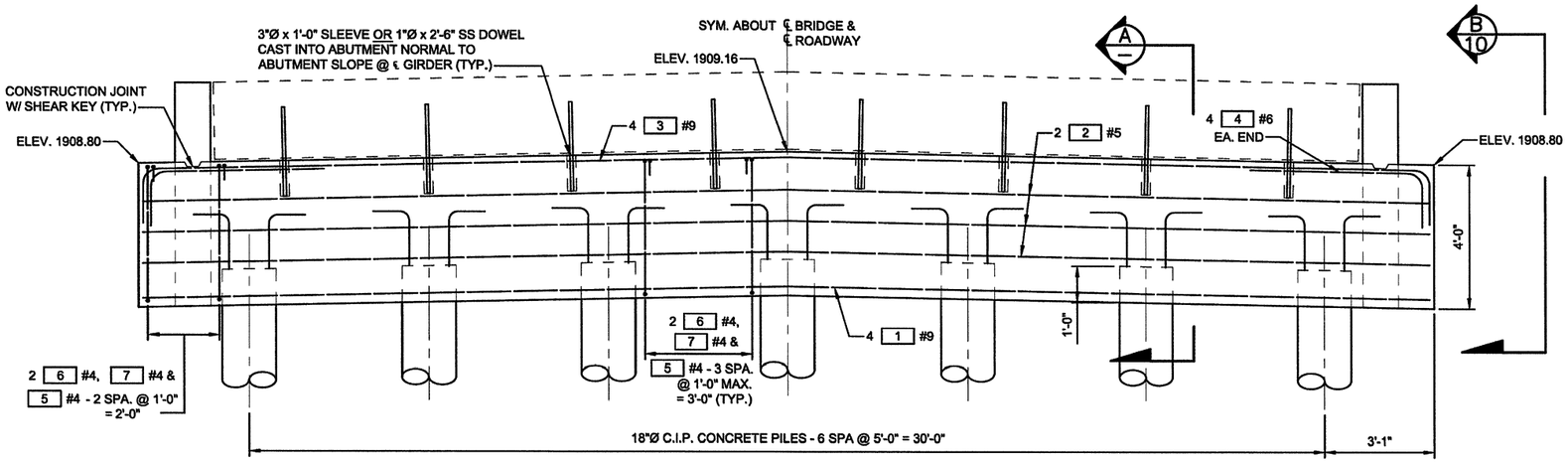

PILE CAP NO. 2 ELEVATION

LOOKING AHEAD ON STATIONING - ABUT. NO. 2
LOOKING BACK ON STATIONING - ABUT. NO. 1

WINGWALLS SHALL BE POURED AFTER GIRDERS ARE ERECTED.

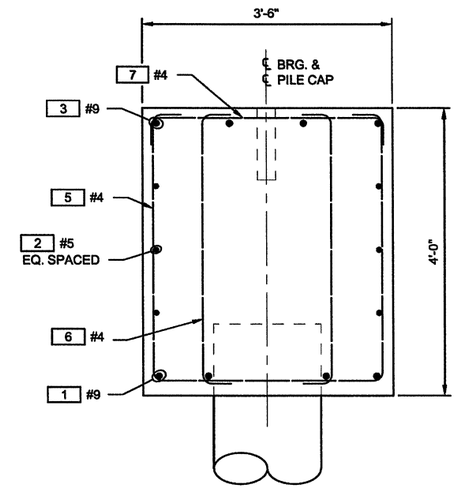

SECTION A

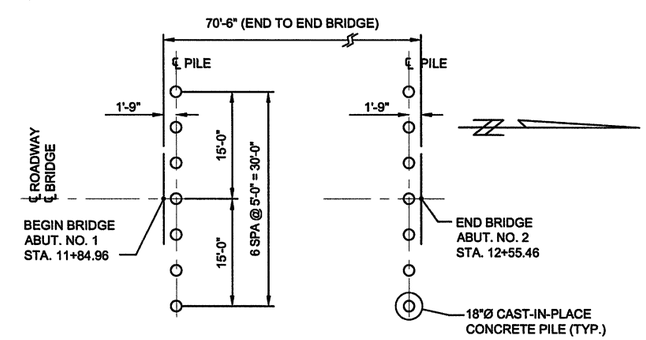

PILE LAYOUT

SUSAN M KOVICH
STATE OF WASHINGTON
39869
REGISTERED
PROFESSIONAL ENGINEER
6/21/21

Designed by: SMK Date: 4/21	Nicholls Kovich Engineering, PLLC	Fed. Aid Proj. No. BROS-2024(033)	Okanogan County Department of Public Works
Drawn by: SEC Date: 4/21	P.O. Box 1050 Veradale WA 99037-1050	Project No. 3683-02	1234-A 2nd Ave. S. 509-422-7300
Checked by: SMK Date: 4/21	Phone: (509) 921-6747 Fax: (509) 242-8777		Okanogan, Washington 98840
Fed. Funct. Class: Local	E-mail: info@nichollskovich.com	Approved: _____ Approval Date	
Terrain Type: Flat			
Design Year: 2040			
Design Year ADT: 60			
Design Speed: 50			

COUNTY ROAD PROJECT NO. 3683-02

ABUTMENT PLAN & ELEVATION

B-4 BRIDGE REPLACEMENT

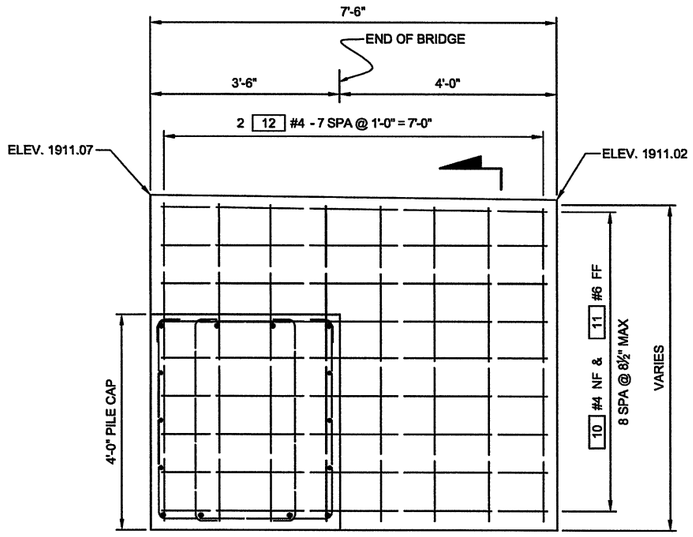

VIEW B/9 C/—

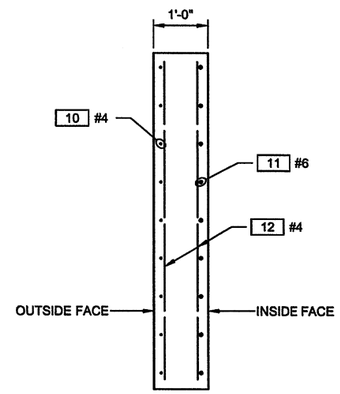

SECTION C/—

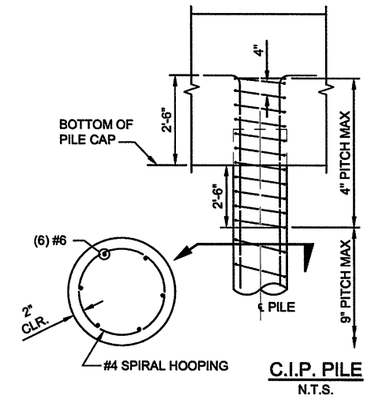

C.I.P. PILE
N.T.S.

REINFORCING IN THE CAST-IN-PLACE CONCRETE PILES SHALL BE (6) #6 BARS. THE REINFORCEMENT SHALL EXTEND A MINIMUM OF 25 FEET BELOW THE GROUND LINE OR TO THE BOTTOM OF THE PILE, WHICHEVER IS LESS. ALL BARS SHALL BE RIGIDLY FASTENED TOGETHER IN A SINGLE UNIT WHICH IS TO BE LOWERED INTO THE CASING BEFORE THE CONCRETE IS PLACED. NO LOOSE BARS WILL BE PERMITTED. THE REINFORCEMENT SHALL BE CAREFULLY POSITIONED AND SECURELY FASTENED IN SUCH A MANNER AS TO ENSURE 2 INCHES CLEARANCE BETWEEN THE MAIN REINFORCING BARS AND THE PILE CASINGS. THE SPIRAL REINFORCEMENT SHALL BE #4 BARS AS SHOWN. COST OF REINFORCEMENT SHALL BE INCLUDED IN THE COST OF THE PILES.

BAR LIST

MARK NO.	LOCATION	WEIGHT	SIZE	NO.	LENGTH	REMARKS
	SUBSTRUCTURE					
1	PILE CAP HORIZ. BOTTOM	975	9	8	35'-10"	STR.
2	PILE CAP HORIZ. SIDES	448	5	12	35'-10"	STR.
3	PILE CAP HORIZ. TOP	1043	9	8	38'-4"	
4	PILE CAP END BARS	148	6	16	6'-2"	
5	PILE CAP STIRRUPS	438	4	60	10'-11"	
6	PILE CAP STIRRUPS	341	4	120	4'-3"	
7	PILE CAP TIES	150	4	60	3'-9"	
8	SS GIRDER DOWEL	107	1"Ø	16	2'-6"	STR.
10	WINGWALL HORIZONTAL	172	4	36	7'-2"	STR.
11	WINGWALL HORIZONTAL	388	6	36	7'-2"	STR.
12	WINGWALL VERTICAL	253	4	64	5'-11" *	STR.
	SUBSTRUCTURE	4,463 lbs.				
					* AVERAGE LENGTH	

BENDING DIAGRAM
ALL DIMENSIONS ARE OUT TO OUT

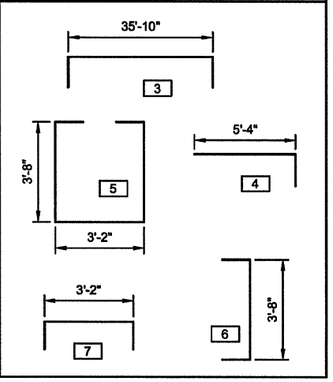

6/21/21

Designed by: SMK	Date: 4/21
Drawn by: SEC	Date: 4/21
Checked by: SMK	Date: 4/21
Fed. Funct. Class: Local	
Terrain Type: Flat	
Design Year: 2040	
Design Year ADT: 60	
Design Speed: 50	

Nicholls Kovich Engineering, PLLC
P.O. Box 1050 Veradale WA 99037-1050
Phone: (509) 921-6747 Fax: (509) 242-8777
E-mail: info@nichollskovich.com

Fed. Aid Proj. No. BROS-2024(033)
Project No. 3683-02

Approved: _____ Approval Date

Okanogan County
Department of Public Works
1234-A 2nd Ave. S. 509-422-7300
Okanogan, Washington 98840

COUNTY ROAD PROJECT NO. 3683-02

ABUTMENT & WINGWALL DETAILS

B-4 BRIDGE REPLACEMENT

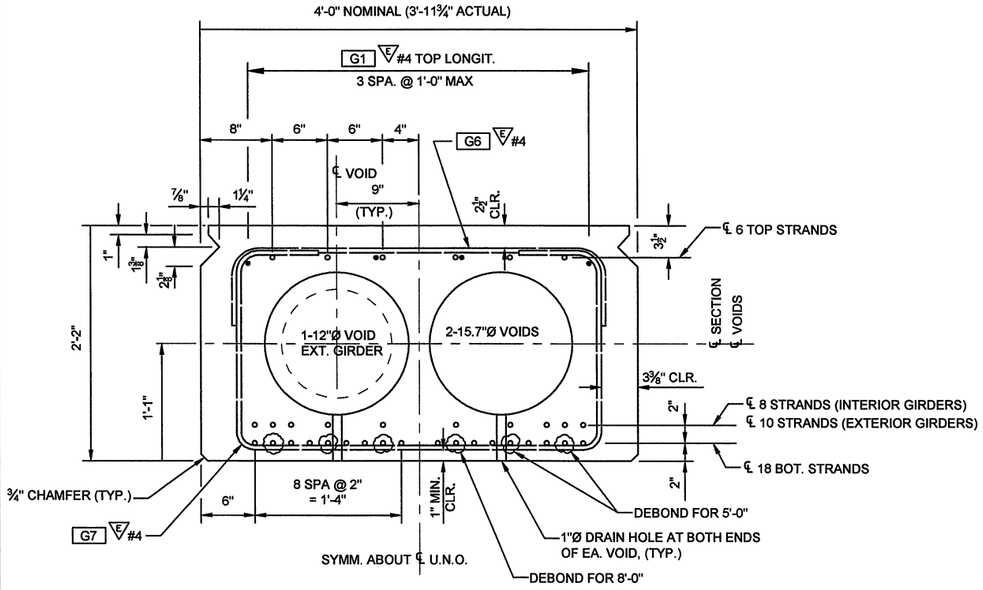

TYPICAL SECTION

INTERIOR GIRDER SHOWN. FOR EXTERIOR GIRDER,
OMIT KEYWAY ON EXTERIOR SIDE, MODIFY EXTERIOR VOID &
ADD GALV. INSERT FOR UTILITY

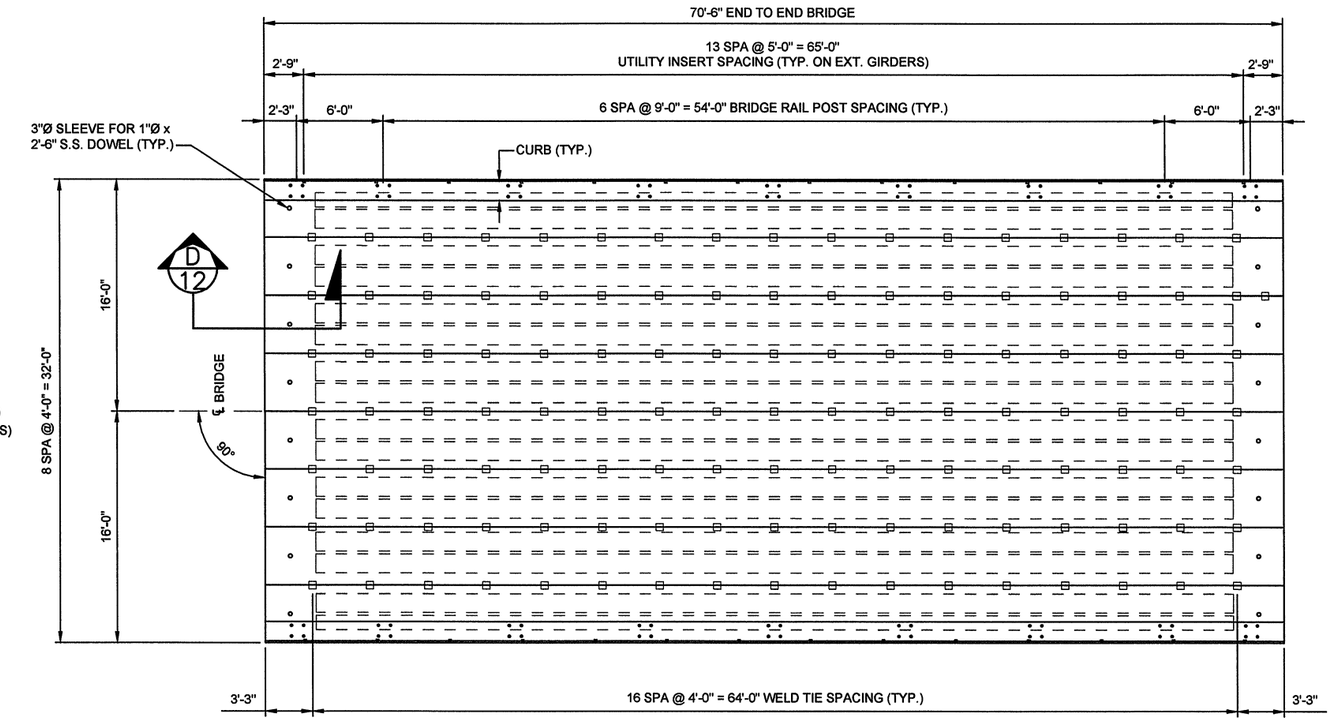

DECK PLAN

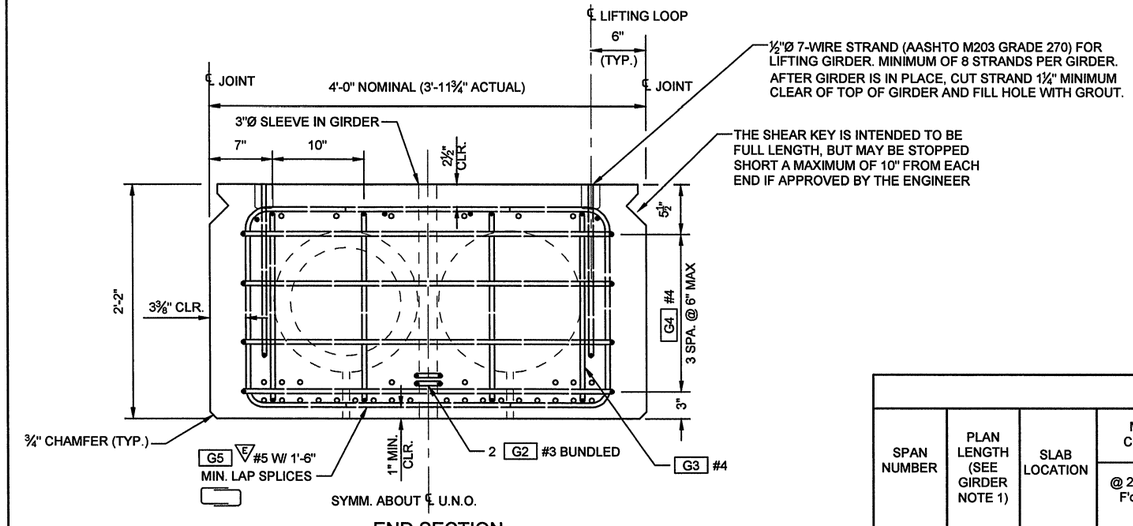

END SECTION

INTERIOR GIRDER SHOWN. FOR EXTERIOR GIRDER,
OMIT KEYWAY ON EXTERIOR SIDE, MODIFY EXTERIOR VOID &
ADD GALV. INSERT FOR UTILITY

GIRDER NOTES

1. PLAN LENGTH SHALL BE INCREASED AS NECESSARY TO COMPENSATE FOR SHORTENING DUE TO PRESTRESS AND SHRINKAGE.
2. ALL PRESTRESSING STEEL SHALL BE 0.6"Ø LOW-RELAXATION 7-WIRE STRANDS (AASHTO M203 GRADE 270) STRANDS SHALL BE TENSIONED INITIALLY TO 43,940 POUNDS (.75 Fpu).
3. CUT ALL STRANDS FLUSH WITH THE GIRDER ENDS AND PAINT WITH AN APPROVED EPOXY RESIN.
4. THE TOP SURFACE OF THE GIRDER SHALL BE FINISHED IN ACCORDANCE WITH SECTION 6-02.3(10)D6 AS REQUIRED BY SECTION 6-02.3(25)H OF THE STANDARD SPECIFICATIONS.
5. ALL MILD REINFORCING SHALL CONFORM TO AASHTO M 31, GRADE 60. ALL REINFORCING STEEL SPLICES SHALL BE 2'-0" MINIMUM UNLESS SHOWN OTHERWISE.
6. IF CURB IS PRECAST ON EXTERIOR GIRDERS, SHIPPING AND HANDLING SHALL BE DESIGNED BY THE CONTRACTOR. ESTIMATED CAMBER IN GIRDER SCHEDULE IS BASED UPON GIRDER SECTION WITHOUT CURB.

GIRDER SCHEDULE

SPAN NUMBER	PLAN LENGTH (SEE GIRDER NOTE 1)	SLAB LOCATION	MIN. CONCRETE COMP. STRENGTH		PRESTRESSING STRANDS (SEE GIRDER NOTES 2 & 3)						D (EST. CAMBER)	
					ROW 1		ROW 2		TOP ROW	C.G		
			@ 28 DAYS F'c (KSI)	RELEASE F'c (KSI)	PERMANENT STRANDS	DEBONDED NUMBER	PERMANENT STRANDS	DEBONDED NUMBER	PERMANENT STRANDS	TOTAL STRANDS FROM BOT.	LOWER BOUND @ 40 DAYS	UPPER BOUND @ 120 DAYS
1	70'-6"	EXTERIOR	7.00	5.00	18	6	10	0	6	6.21"	⅞"	2"
1	70'-6"	INTERIOR	7.00	5.00	18	6	8	0	6	6.34"	¾"	1⅞"

SUSAN M KOVICH
STATE OF WASHINGTON
39869
REGISTERED PROFESSIONAL ENGINEER
6/21/21

Designed by: SMK	Date: 4/21
Drawn by: SEC	Date: 4/21
Checked by: SMK	Date: 4/21
Fed. Funct. Class: Local	
Terrain Type: Flat	
Design Year: 2040	
Design Year ADT: 60	
Design Speed: 50	

Nicholls Kovich Engineering, PLLC
P.O. Box 1050 Veradale WA 99037-1050
Phone: (509) 921-6747 Fax: (509) 242-8777
E-mail: info@nichollskovich.com

Fed. Aid Proj. No. BROS-2024(033)
Project No. 3683-02

Approved: _____ Approval Date

Okanogan County
Department of Public Works
1234-A 2nd Ave. S. 509-422-7300
Okanogan, Washington 98840

COUNTY ROAD PROJECT NO. 3683-02

GIRDER DETAILS 1

B-4 BRIDGE REPLACEMENT

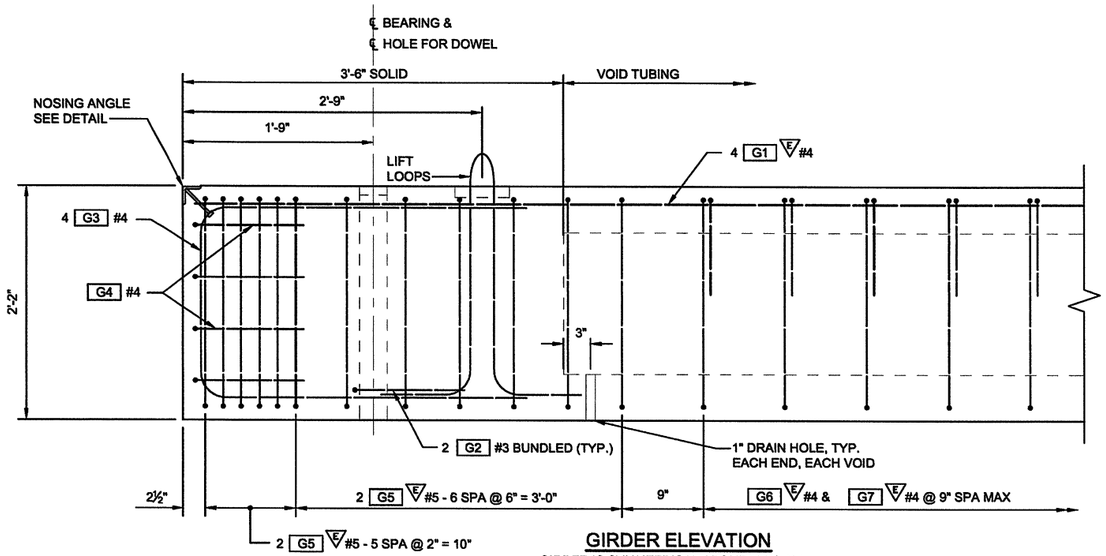

GIRDER ELEVATION

GIRDER IS SYMMETRICAL ABOUT MIDSPAN

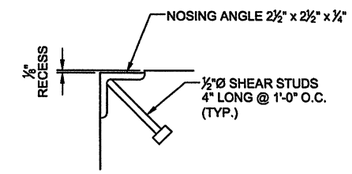

NOSING ANGLE DETAIL

GALVANIZE AFTER FABRICATION

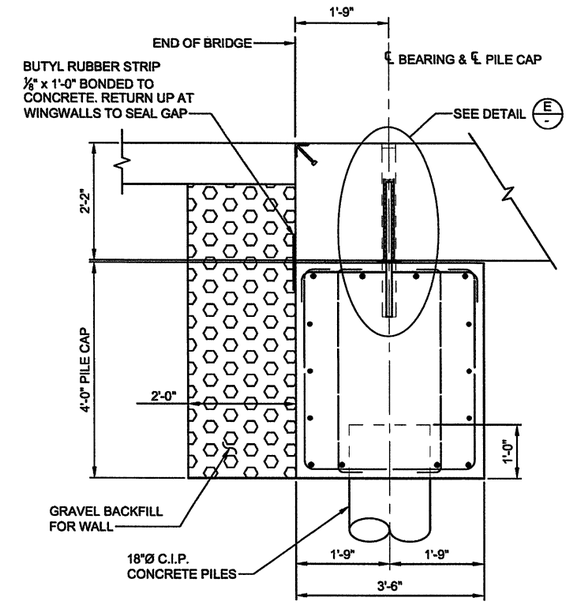

PILE CAP D / 11

GIRDER BAR LIST ALL REINFORCING SHALL BE AASHTO M 31 (GRADE 60)			
MARK	LOCATION	SIZE	
G1	SLAB LONGIT. - TOP	4	STR. EPOXY
G2	END OF SLAB - SLEEVE TIE	3	
G3	END OF SLAB - TIE	4	
G4	END OF SLAB - TIE	4	
G5	SLAB TRANSV. - TIE	5	EPOXY
G6	SLAB TRANSV. - TIE	4	EPOXY
G7	SLAB TRANSV. - STIRRUP	4	EPOXY

E EPOXY COATED

BENDING DIAGRAMS

BENDING DIAGRAM (ALL DIMENSIONS ARE OUT TO OUT)

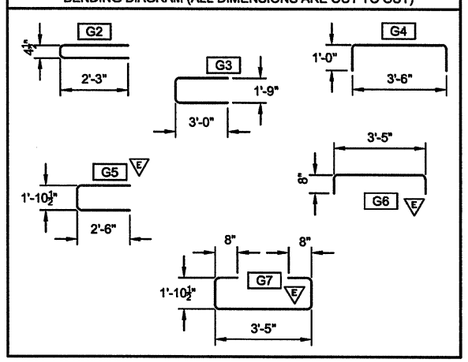

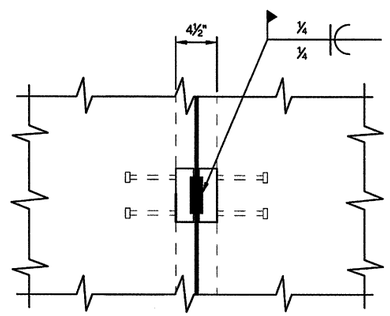

PLAN

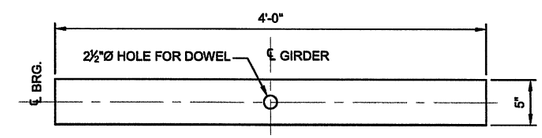

BEARING PAD DETAIL

¾" THICK ELASTOMERIC BEARING PAD (60 DUROMETER HARDNESS)

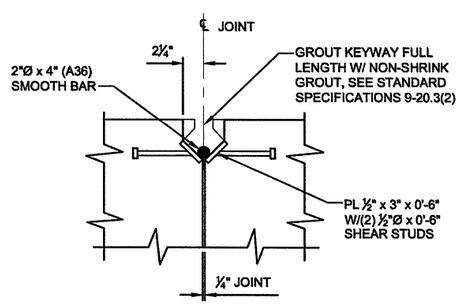

TYPICAL WELD TIE DETAIL

THE KEYWAYS AND WELD TIES SHALL BE LIGHTLY SAND BLASTED AT PLANT.

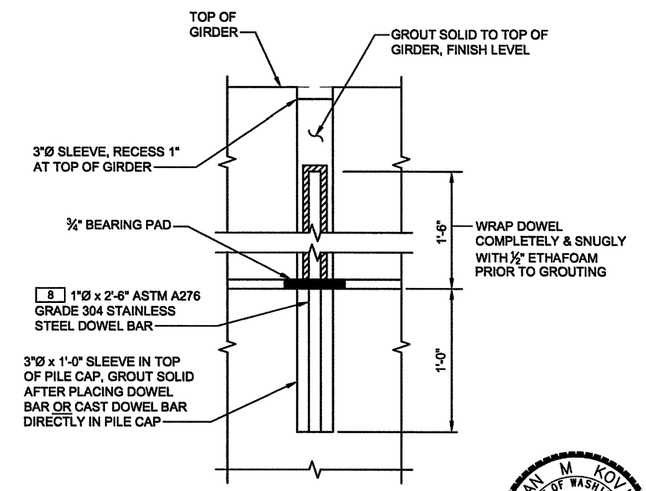

DETAIL E

SUSAN M KOVICH STATE OF WASHINGTON 39869 REGISTERED PROFESSIONAL ENGINEER

6/21/21

Designed by: SMK	Date: 4/21		
Drawn by: SEC	Date: 4/21		
Checked by: SMK	Date: 4/21		
Fed. Funct. Class: Local			
Terrain Type: Flat			
Design Year: 2040			
Design Year ADT: 60			
Design Speed: 50			

Nicholls Kovich Engineering, PLLC
P.O. Box 1050 Veradale WA 99037-1050
Phone: (509) 921-6747 Fax: (509) 242-8777
E-mail: info@nichollskovich.com

Fed. Aid Proj. No. BROS-2024(033)
Project No. 3683-02

Approved: _____ Approval Date

Okanogan County Department of Public Works
1234-A 2nd Ave. S. 509-422-7300
Okanogan, Washington 98840

COUNTY ROAD PROJECT NO. 3683-02

GIRDER DETAILS 2

B-4 BRIDGE REPLACEMENT

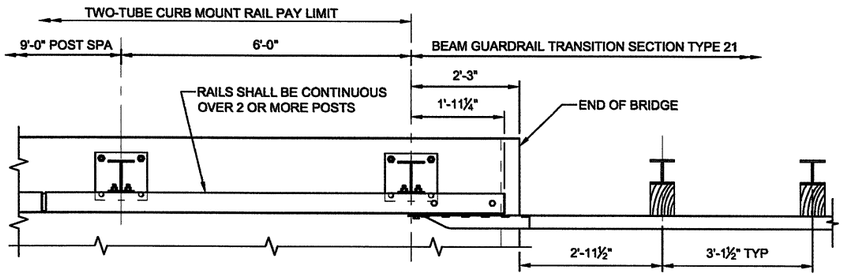

PLAN - CURB MOUNT RAIL

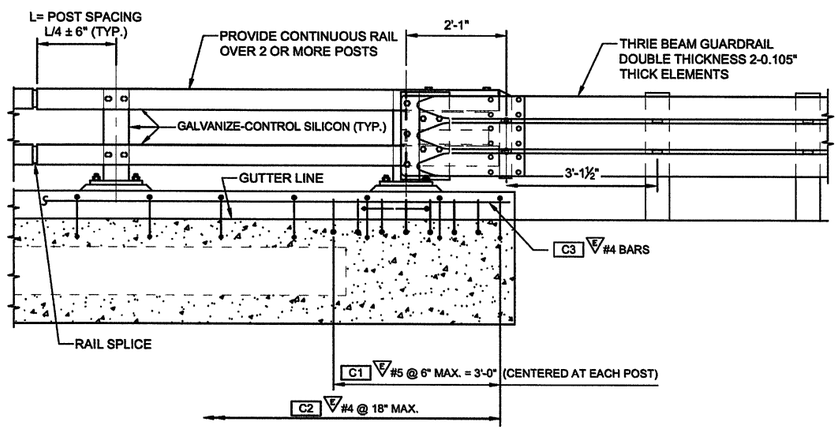

ELEVATION - CURB MOUNT RAIL

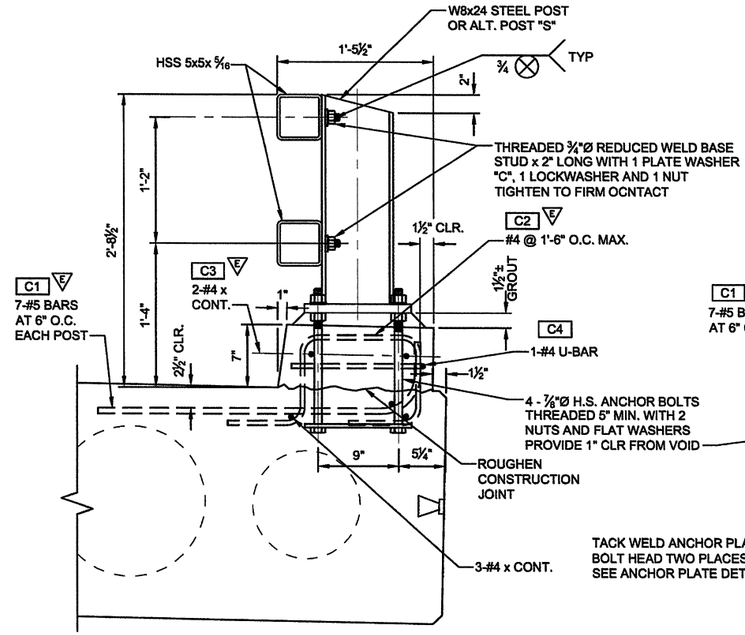

RAIL SECTION

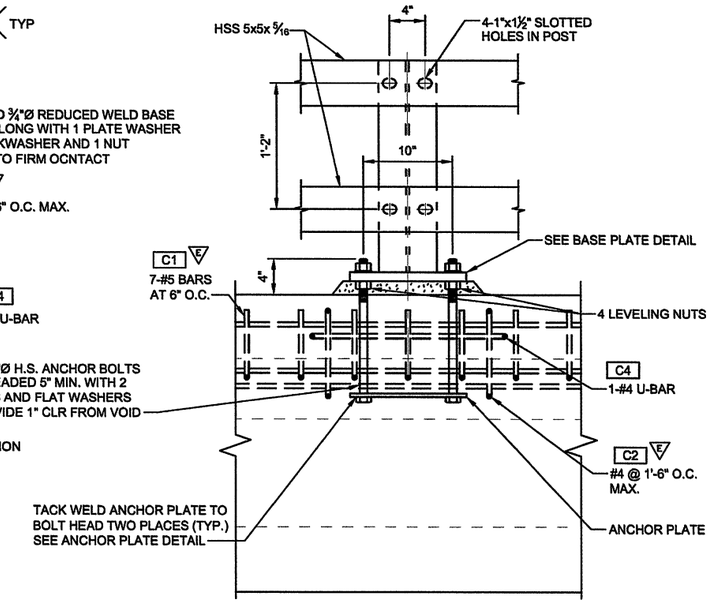

TRAFFIC SIDE RAIL VIEW

RAIL DETAILS ON BRIDGE SLAB

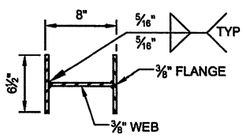

ALTERNATE POST "S"

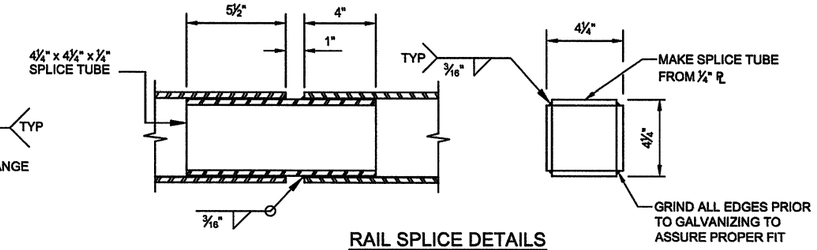

RAIL SPLICE DETAILS

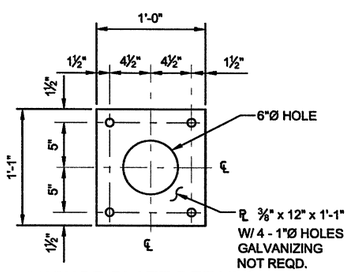

ANCHOR PLATE DETAILS

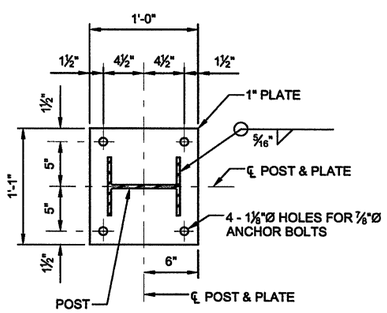

BASE PLATE DETAILS

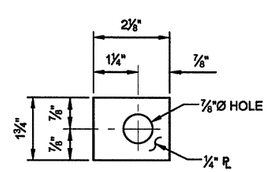

PLATE WASHER "C"

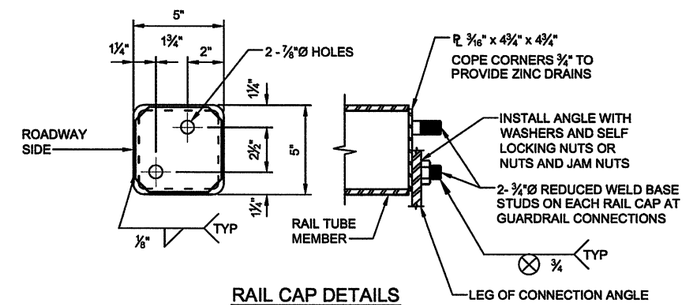

RAIL CAP DETAILS

SUSAN M. KOVICH STATE OF WASHINGTON 39869 REGISTERED PROFESSIONAL ENGINEER
6/21/21

Designed by: SMK Date: 4/21 Drawn by: SEC Date: 4/21 Checked by: SMK Date: 4/21 Fed. Funct. Class: Local Terrain Type: Flat Design Year: 2040 Design Year ADT: 60 Design Speed: 50	Nicholls Kovich Engineering, PLLC P.O. Box 1050 Veradale WA 99037-1050 Phone: (509) 921-6747 Fax: (509) 242-8777 E-mail: info@nichollskovich.com	Fed. Aid Proj. No. BROS-2024(033) Project No. 3683-02 Approved: _____ Approval Date	Okanogan County Department of Public Works 1234-A 2nd Ave. S. 509-422-7300 Okanogan, Washington 98840	COUNTY ROAD PROJECT NO. 3683-02 RAILING DETAILS 1 B-4 BRIDGE REPLACEMENT	SHEET 13 of 17

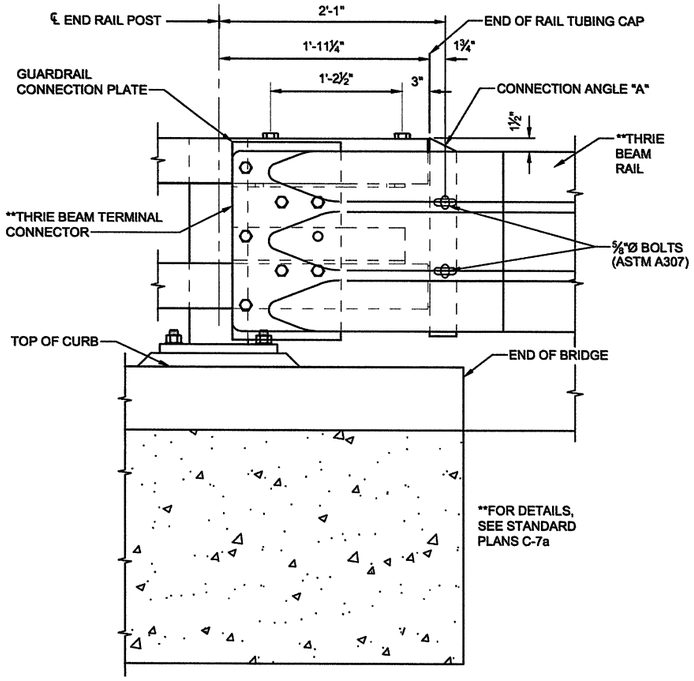

TERMINAL CONNECTOR

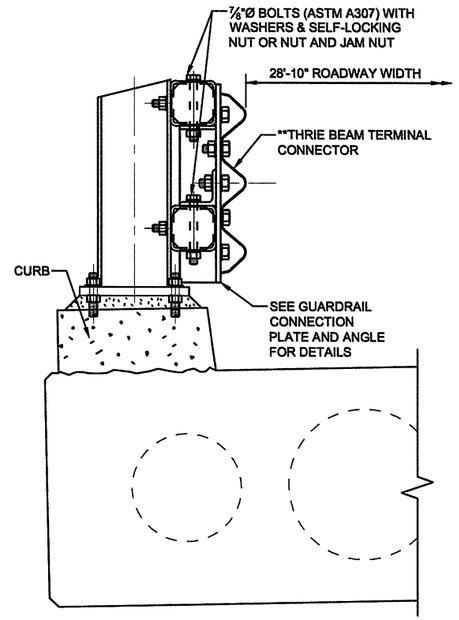

GUARDRAIL CONNECTION DETAIL

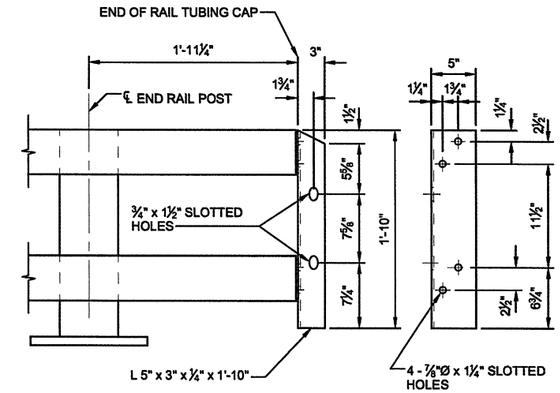

CONNECTION ANGLE "A"

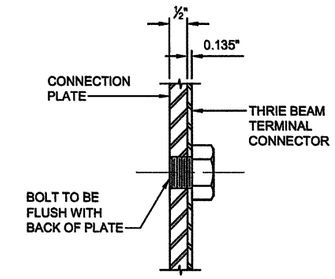

DETAIL "B"

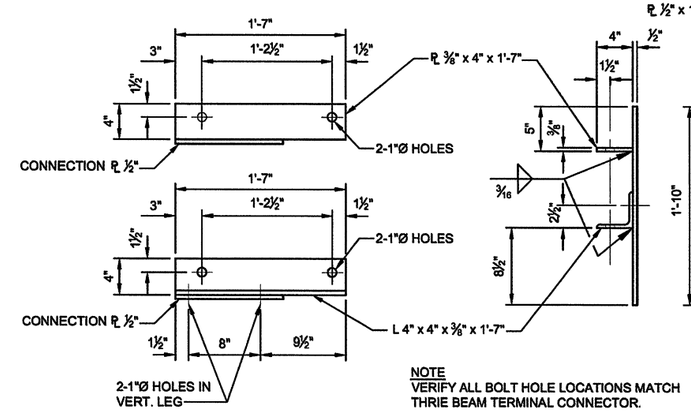

GUARDRAIL CONNECTION PLATE AND ANGLE

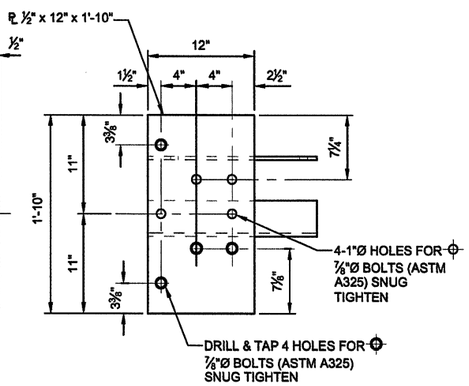

GUARDRAIL CONNECTION PLATE

RAILING NOTES

1. CONCRETE FOR CURBS SHALL BE CONCRETE CLASS 4000.
2. ANCHOR BOLTS, NUTS AND WASHERS SHALL CONFORM WITH A.S.T.M. F-1554 GRADE 105 AND ARE TO BE GALVANIZED IN ACCORDANCE WITH A.S.T.M. A-153, UNLESS NOTED OTHERWISE.
3. RAILING SHALL BE FABRICATED FROM SQ. STR. TUBE CONFORMING TO A.S.T.M. A-500 GRADE B, A.S.T.M. A-618, OR A.S.T.M. A-501 STEEL. POSTS, ANGLES, PLATES AND SLEEVES ARE TO BE A.S.T.M. A-36 STEEL.
4. THE RAILING SHALL BE FABRICATED IN A PLANT EXPERIENCED IN PRODUCING RAILINGS AND ARCHITECTURAL METAL WORK AND SHALL BE ERECTED BY SKILLED WORKMAN EXPERIENCED IN THIS TYPE OF WORK. FABRICATION AND ERECTION OF THE RAILING SHALL CONFORM TO THE REQUIREMENTS OF THE AASHTO SPECIFICATIONS FOR HIGHWAY BRIDGES AND WSDOT STANDARD SPECIFICATIONS FOR ROAD, BRIDGE, AND MUNICIPAL CONSTRUCTION, DATED 2021.
5. SHOP DRAWINGS SHALL BE SUBMITTED TO THE ENGINEER AND SHALL INCLUDE COMPLETE DIMENSIONS AND DETAILS OF FABRICATION INCLUDING AN ERECTION DIAGRAM. MATERIALS BEING USED SHALL BE CLEARLY SPECIFIED.
6. ALL POSTS SHALL BE VERTICAL.
7. RAILINGS AND SLEEVES SHALL BE GALVANIZED AFTER FABRICATION IN ACCORDANCE WITH A.S.T.M. SPECIFICATION A-123 AND A.S.T.M. A-385. ALL WELDED AREAS SHALL BE THOROUGHLY CLEANED PRIOR TO GALVANIZING TO REMOVE ALL SLAG OR OTHER MATERIAL THAT WOULD INTERFERE WITH THE ADHERENCE OF THE ZINC. THE GALVANIZED SURFACES SHALL BE FREE OF FINS, ABRASIONS, ROUGH OR SHARP EDGES OR OTHER SURFACE DEFECTS.
8. GALVANIZE-CONTROL SILICON MEANS SILICON CONTENT OF THE BASE METAL SHALL BE IN THE RANGE OF 0 TO 0.06% (PREFERABLY 0 TO 0.04%) OR 0.15 TO 0.28% (PREFERABLY 0.15 TO 0.25%).
9. BASE PLATES AND ENDS OF TUBE SECTIONS AT SPLICES TO BE SAWED OR MILLED. CUT ENDS TO BE TRUE, SMOOTH AND FREE FROM BURRS OR RAGGED EDGES.
10. ALTERNATE SPLICE DETAIL MAY BE SUBMITTED FOR APPROVAL ON SHOP DRAWINGS.

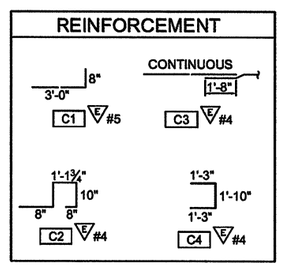

SUSAN M. KOVICH STATE OF WASHINGTON 39869 REGISTERED PROFESSIONAL ENGINEER
6/21/21

Designed by: SMK	Date: 4/21	Fed. Aid Proj. No. BROS-2024(033)	COUNTY ROAD PROJECT NO. 3683-02
Drawn by: SEC	Date: 4/21	Project No. 3683-02	RAILING DETAILS 2
Checked by: SMK	Date: 4/21		
Fed. Funct. Class: Local		Approved: _____ Approval Date	B-4 BRIDGE REPLACEMENT
Terrain Type: Flat			
Design Year: 2040			
Design Year ADT: 60			
Design Speed: 50			

Nicholls Kovich Engineering, PLLC
P.O. Box 1050 Veradale WA 99037-1050
Phone: (509) 921-6747 Fax: (509) 242-8777
E-mail: info@nichollskovich.com

Okanogan County Department of Public Works
1234-A 2nd Ave. S. 509-422-7300
Okanogan, Washington 98840

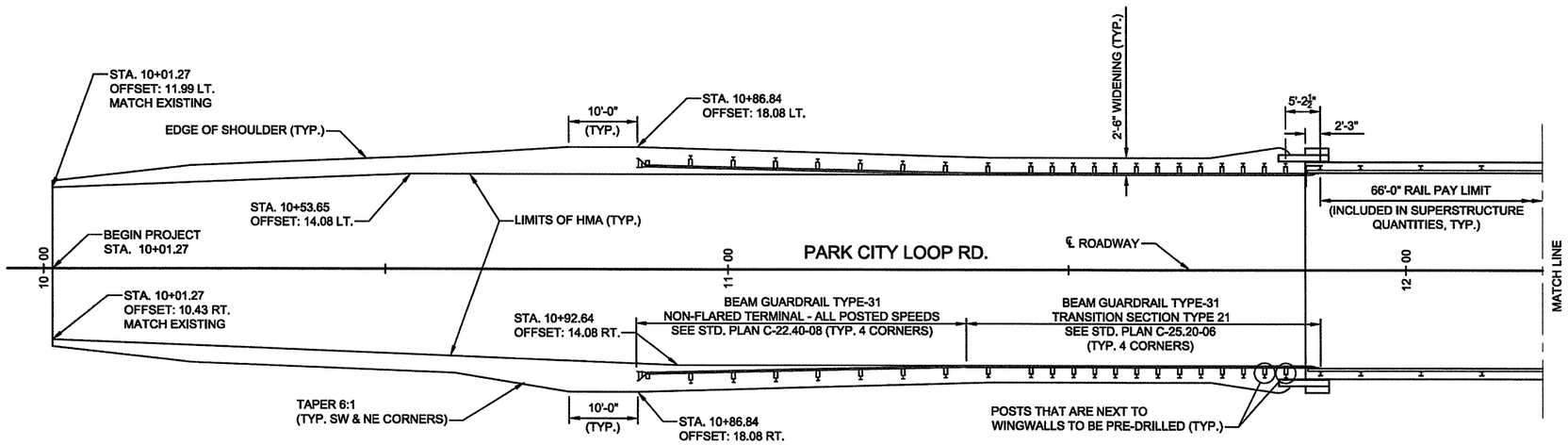

GUARDRAIL & SHOULDER LAYOUT - SOUTH

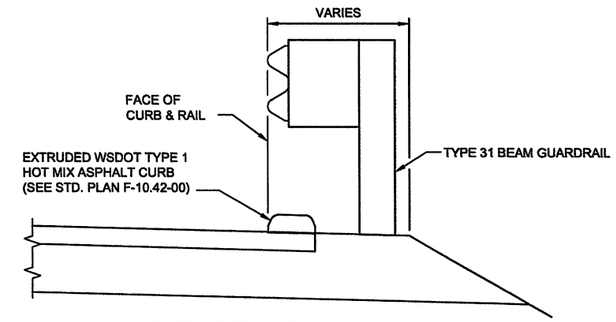

EXTRUDED CURB
ALL FOUR CORNERS
SEE GUARDRAIL LAYOUT FOR LIMITS

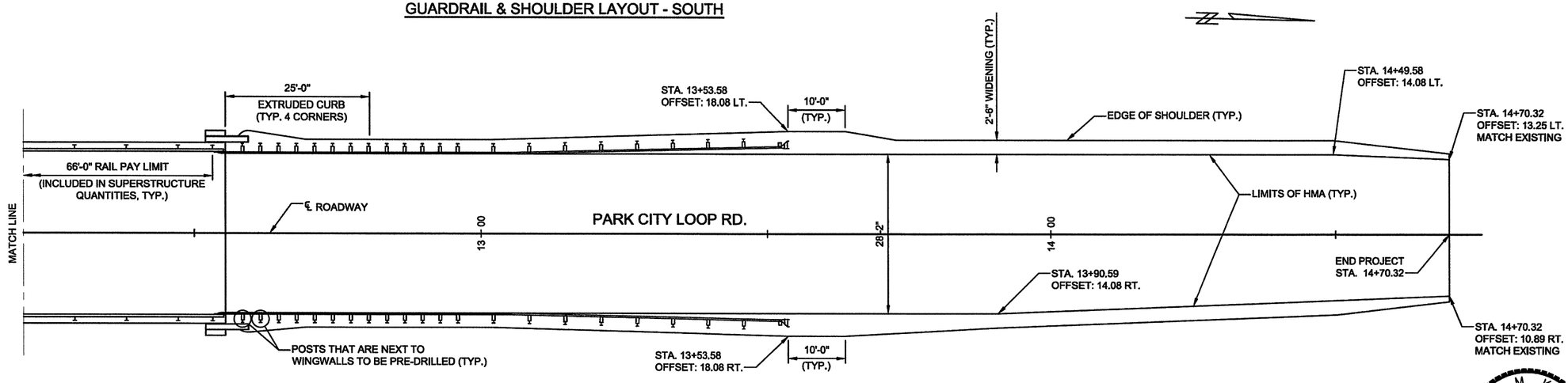

GUARDRAIL & SHOULDER LAYOUT - NORTH

SUSAN M KOVICH
STATE OF WASHINGTON
39869
REGISTERED
PROFESSIONAL ENGINEER
6/21/21

Designed by: SMK Date: 4/21	Nicholls Kovich Engineering, PLLC	Fed. Aid Proj. No. BROS-2024(033)	Okanogan County Department of Public Works
Drawn by: SEC Date: 4/21	P.O. Box 1050 Veradale WA 99037-1050	Project No. 3683-02	1234-A 2nd Ave. S. 509-422-7300
Checked by: SMK Date: 4/21	Phone: (509) 921-6747 Fax: (509) 242-8777	Approved: _____ Approval Date	Okanogan, Washington 98840
Fed. Funct. Class: Local	E-mail: info@nicholls kovich.com		
Terrain Type: Flat			
Design Year: 2040			
Design Year ADT: 60			
Design Speed: 50			

COUNTY ROAD PROJECT NO. 3683-02

GUARDRAIL & SHOULDER LAYOUT

B-4 BRIDGE REPLACEMENT

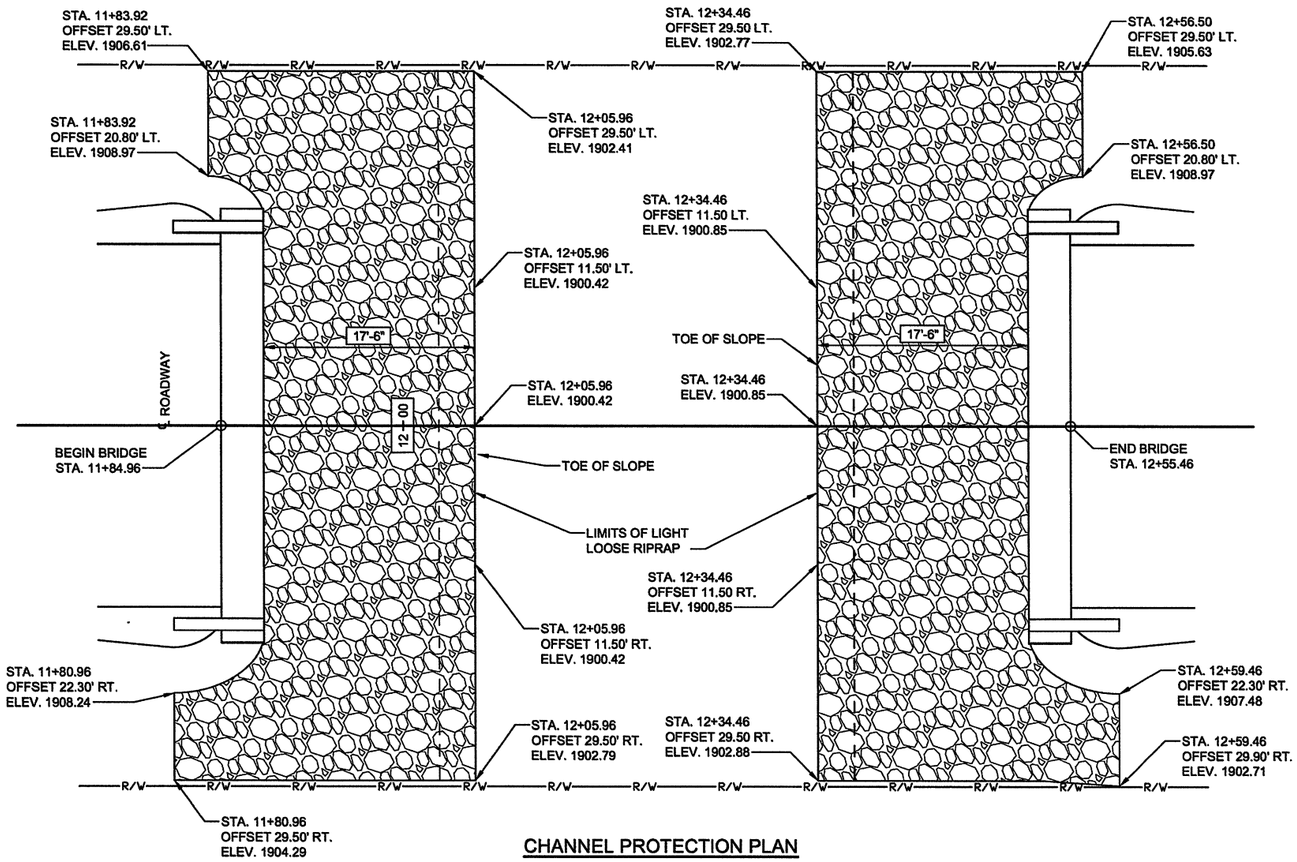

CHANNEL PROTECTION PLAN

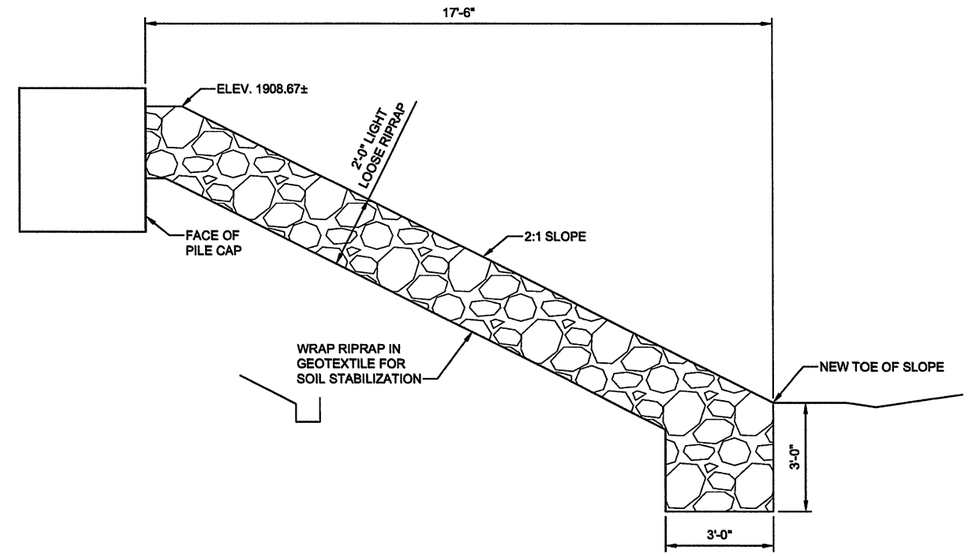

CHANNEL PROTECTION ELEVATION

6/21/21

Designed by: SMK Date: 4/21 Drawn by: SEC Date: 4/21 Checked by: SMK Date: 4/21 Fed. Funct. Class: Local Terrain Type: Flat Design Year: 2040 Design Year ADT: 60 Design Speed: 50	Nicholls Kovich Engineering, PLLC P.O. Box 1050 Veradale WA 99037-1050 Phone: (509) 921-6747 Fax: (509) 242-8777 E-mail: info@nichollskovich.com	Fed. Aid Proj. No. BROS-2024(033) Project No. 3683-02 Approved: _____ Approval Date	Okanogan County Department of Public Works 1234-A 2nd Ave. S. 509-422-7300 Okanogan, Washington 98840	COUNTY ROAD PROJECT NO. 3683-02 CHANNEL PROTECTION B-4 BRIDGE REPLACEMENT	SHEET 16 of 17

TRAFFIC CONTROL PLAN DURING NEW BRIDGE CONSTRUCTION

NOT TO SCALE

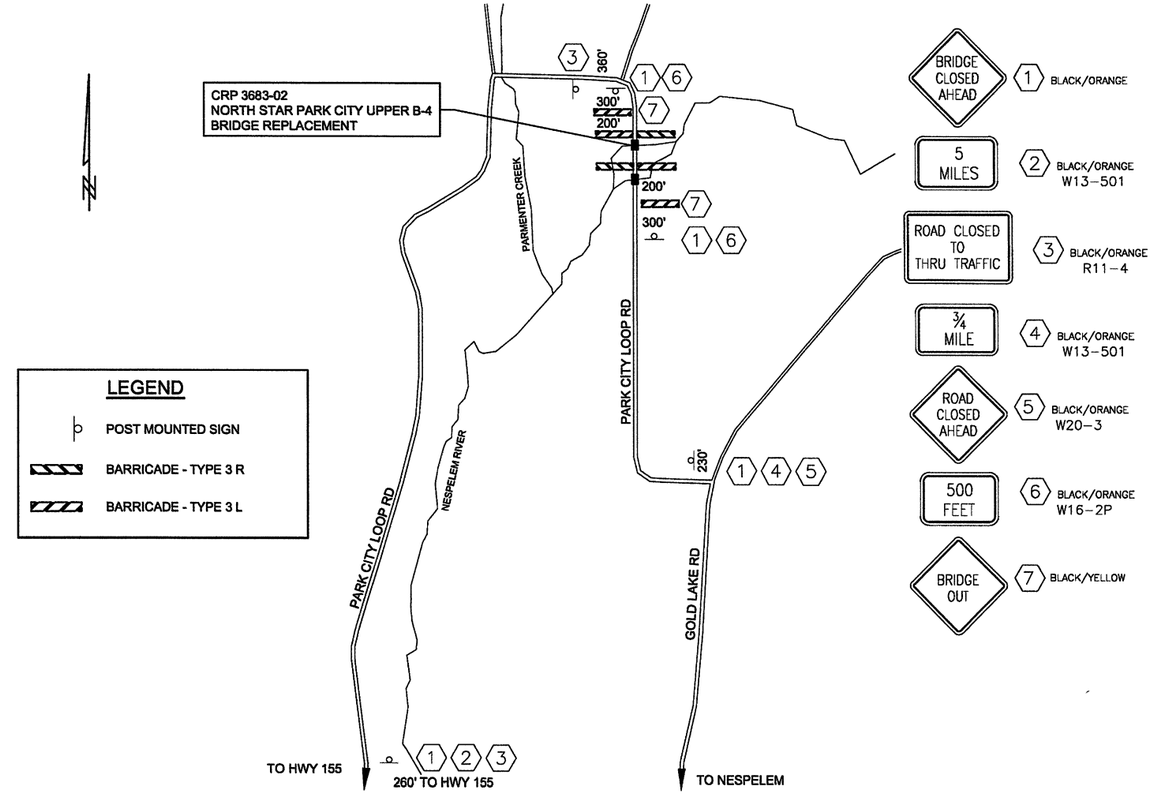

TRAFFIC CONTROL PLAN

GENERAL TRAFFIC CONTROL NOTES:

1. FABRICATION AND INSTALLATION OF TRAFFIC CONTROL DEVICES SHALL CONFORM TO ALL APPLICABLE PROVISIONS OF THE FHWA'S MANUAL ON UNIFORM TRAFFIC CONTROL DEVICES AS ADOPTED BY THE STATE OF WASHINGTON. FABRICATION AND INSTALLATION OF TRAFFIC CONTROL DEVICES SHALL MEET ALL APPLICABLE PROVISIONS OF SECTION 1-10 OF THE CURRENT WSDOT STANDARD SPECIFICATIONS.
2. ALL EXISTING BRIDGE WEIGHT LIMIT SIGNAGE IS THE PROPERTY OF OKANOGAN COUNTY AND WILL BE REMOVED BY THE COUNTY AFTER BRIDGE CLOSURE.
3. TWO FLASHING WARNING LIGHTS (TYPE A PER MUTCD) SHALL BE USED TO MARK EACH BARRICADE.

SUSAN M KOVICH
STATE OF WASHINGTON
39869
REGISTERED PROFESSIONAL ENGINEER
6/21/21

Designed by: SMK Date: 4/21 Drawn by: AVK Date: 4/21 Checked by: SMK Date: 4/21 Fed. Funct. Class: Local Terrain Type: Flat Design Year: 2040 Design Year ADT: 60 Design Speed: 50	Nicholls Kovich Engineering, PLLC P.O. Box 1050 Veradale WA 99037-1050 Phone: (509) 921-6747 Fax: (509) 242-8777 E-mail: info@nichollskovich.com	Fed. Aid Proj. No. BROS-2024(033) Project No. 3683-02 Approved: _____ Approval Date	Okanogan County Department of Public Works 1234-A 2nd Ave. S. 509-422-7300 Okanogan, Washington 98840	COUNTY ROAD PROJECT NO. 3683-02 TRAFFIC CONTROL PLAN B-4 BRIDGE REPLACEMENT	SHEET 17 of 17